INSTRUCTION MANUAL

2ch Digital Indicating Controller WCS-13A

WCS11E2 2008.12

Thank you for purchasing our 2ch digital indicating controller WCS-13A.
This manual contains instructions for the mounting, functions, operations and notes when operating the WCS-13A. To prevent accidents arising from the misuse of this controller, please ensure the operator receives this manual.

Abbreviations used in this manual

Symbol	Term
PV	Process variable
SV	Desired value

Symbol	Term
MV	Manipulated variable
AT	Auto-tuning

Characters used in this manual

Indication	-1	0	1	2	3	4	5	6	7	8	9	C	F
Number, ℃/℉	-1	0	1	2	3	4	5	6	7	8	9	℃	℉
Indication	A	b	c	d	E	F	G	H	I	J	k	L	m
Alphabets	A	B	C	D	E	F	G	H	I	J	K	L	M
Indication	n	o	P	q	r	s	T	U	V	W	X	Y	Z
Alphabets	N	O	P	Q	R	S	T	U	V	W	X	Y	Z

⚠ Caution

- This instrument should be used in accordance with the specifications described in the manual. If it is not used according to the specifications, it may malfunction or cause a fire.
- Be sure to follow the warnings, cautions and notices. If they are not observed, serious injury or malfunction may occur.
- The contents of this instruction manual are subject to change without notice.
- Care has been taken to assure that the contents of this instruction manual are correct, but if there are any doubts, mistakes or questions, please inform our sales department.
- This instrument is designed to be installed through the control panel. If it is not, measures must be taken to ensure that the operator cannot touch power terminals or other high voltage sections.
- Any unauthorized transfer or copying of this document, in part or in whole, is prohibited.
- Shinko Technos CO., LTD. is not liable for any damage or secondary damage(s) incurred as a result of using this product, including any indirect damage.

Safety precautions (Be sure to read these precautions before using our products.)

The safety precautions are classified into categories: "Warning" and "Caution". Depending on the circumstances, procedures indicated by ⚠ Caution may be linked to serious results, so be sure to follow the directions for usage.

⚠ Warning Procedures which may lead to dangerous conditions and cause death or serious injury, if not carried out properly.

⚠ Caution Procedures which may lead to dangerous conditions and cause superficial to medium injury or physical damage or may degrade or damage the product, if not carried out properly.

⚠ Warning

- To prevent an electric shock or fire, only Shinko or other qualified service personnel may handle the inner assembly.
- To prevent an electric shock, fire or damage to the instrument, parts replacement may only be undertaken by Shinko or other qualified service personnel.

⚠ SAFETY PRECAUTIONS

- To ensure safe and correct use, thoroughly read and understand this manual before using this instrument.
- This instrument is intended to be used for industrial machinery, machine tools and measuring equipment. Verify correct usage after consulting purpose of use with our agency or main office. (Never use this instrument for medical purposes with which human lives are involved.)
- External protection devices such as protection equipment against excessive temperature rise, etc. must be installed, as malfunction of this product could result in serious damage to the system or injury to personnel. Also proper periodic maintenance is required.
- This instrument must be used under the conditions and environment described in this manual. Shinko Technos Co., Ltd. does not accept liability for any injury, loss of life or damage occurring due to the instrument being used under conditions not otherwise stated in this manual.

Caution with respect to Export Trade Control Ordinance

To avoid this instrument from being used as a component in, or as being utilized in the manufacture of weapons of mass destruction (i.e. military applications, military equipment, etc.), please investigate the end users and the final use of this instrument. In the case of resale, ensure that this instrument is not illegally exported.

1. Model

1.1 Model

W C S - 1 3 A - □ □ / □ □ □, □□									Series name: WCS-13A (W48 x H48 x D95mm)
Control action	3								PID
Alarm output		A							Alarm type can be selected by keypad. (*1)
CH1 control output			R						Relay contact: 1a
			S						Non-contact voltage (for SSR drive): 12V DC±15%
			A						DC current: 4 to 20mA DC
CH2 control output				R					Relay contact: 1a
				S					Non-contact voltage (for SSR drive): 12V DC±15%
				A					DC current: 4 to 20mA DC
				0					No control output as CH2 input is based on delay timer (-T) spec
CH1 input					M				Multi-range input (*2)
					V				DC voltage input (*3)
CH2 input						M			Multi-range input (2ch controller) (*2)
						V			DC voltage input (2ch controller) (*3)
						T			Delay timer (1ch controller + Timer)
						S			PV difference input: CH1 PV – CH2 PV = PV Control is performed using the PV. (1ch controller)
Supply voltage									100 to 240V AC (standard)
							1		24V AC/DC (*4)
Option								BK	Color: Black
								TC	Terminal cover

(*1): Alarm types (9 types and No alarm action) and Energized/De-energized can be selected by keypad.
(*2): Thermocouple, RTD, DC current, and DC voltage (only 0 to 1V DC) can be selected by keypad.
(*3): 0 to 5V DC, 1 to 5V DC or 0 to 10V DC can be selected by keypad.
(*4): Supply voltage 100 to 240V AC is standard. When ordering 24V AC/DC, enter “1” after the input code.

1.2 How to read the model label

Model labels are attached to the left side of case and the inner assembly.

• Label on the inner assembly

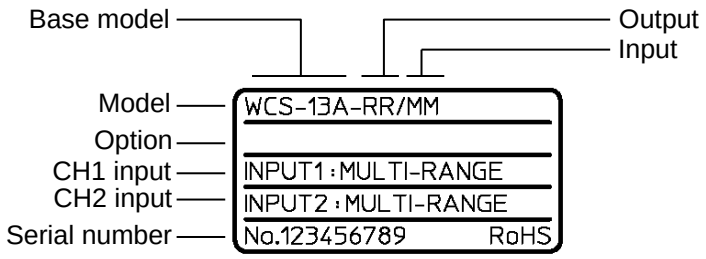

(Fig. 1.2-1)

• Label on the case

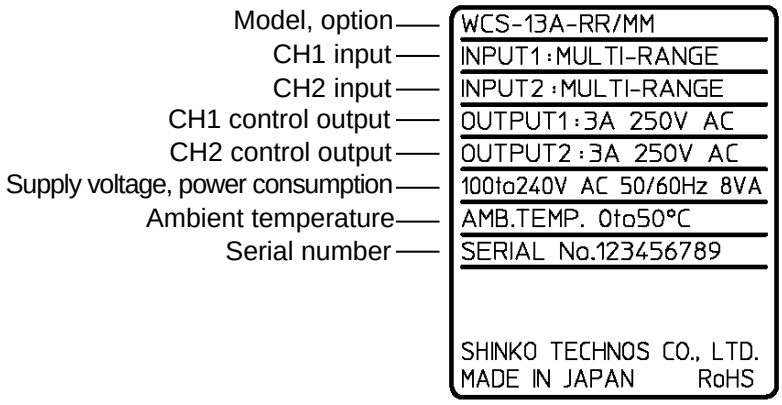

(Fig. 1.2-2)

2. Name and functions of the sections

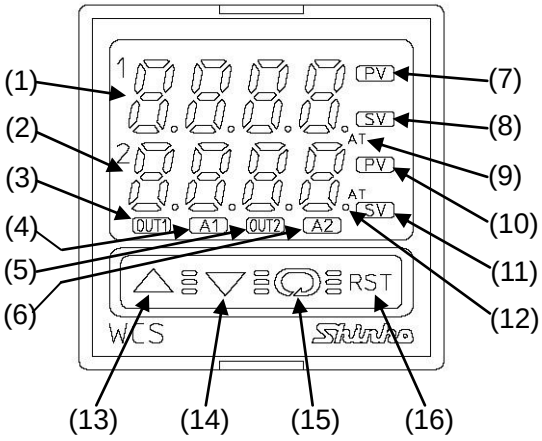

(Fig. 2-1)

(1) **CH1 PV/SV display**
PV indication: PV, MV or setting characters in the setting mode of CH1 is indicated with the red LED.
SV indication: SV, MV or setting characters in the setting mode of CH1 is indicated with the red LED.

(2) **CH2 PV/SV display**
If CH2 controller is selected during CH2 function selection:
PV indication: PV, MV or set values in the setting mode of CH2 is indicated with the red LED.
SV indication: SV, MV or set values in the setting mode of CH2 is indicated with the red LED.

If CH1 output 2, CH1 cooling output, CH1 transmission output is selected during CH2 function selection, or if CH2 is based on PV difference input (-S) spec: No indication.
Set values in the setting mode are indicated with the red LED.

If CH1 timer is selected during CH2 function selection:
CH1 timer set value or set values in the setting mode are indicated with the red LED.
After timer starts, timer remaining time flashes.

If CH2 is based on delay timer (-T) spec:
Timer remaining time or set values in the setting mode are indicated with the red LED after ON or OFF delay timer starts.
When ON or OFF delay timer does not work: No indication

(3) **OUT 1 indicator**: The green LED lights when CH1 control output is ON. (For DC current output type, it flashes corresponding to the manipulated variable in 0.5 second cycles.)

(4) **A1 indicator**: When CH1 alarm output is ON, the red LED lights.

(5) **OUT2 indicator**
If CH2 controller or CH1 output 2 is selected during CH2 function selection:
The green LED lights when CH2 control output is ON. (For DC current output type, it flashes corresponding to the manipulated variable in 0.5 second cycles.)

If CH1 cooling output, CH1 transmission output or CH1 timer is selected during CH2 function selection, or if CH2 is based on delay timer (-T) or PV difference input (-S) spec: Unlit

(6) **A2 indicator**
If CH2 controller or CH1 output 2 is selected during CH2 function selection:
When CH2 alarm output is ON, the red LED lights.

If CH2 is based on delay timer (-T) spec:
When delay timer output is ON, the red LED lights.

If CH1 cooling output, CH1 transmission output or CH1 timer is selected during CH2 function selection, or if CH2 is based on PV difference input (-S) spec: Unlit

(7) **CH1 PV indicator**: When PV is indicated on the CH1 PV/SV display, the red LED lights.

(8) **CH1 SV indicator**: When SV is indicated on the CH1 PV/SV display, the green LED lights.

(9) **CH1 AT indicator**
When CH1 is performing AT or Auto-reset, the yellow LED flashes.
However, During the setting mode(or group setting mode), indications depend on the setting mode.

(10) **CH2 PV indicator**: When PV is indicated on the CH2 PV/SV display, the red LED lights.

(11) **CH2 SV indicator**: When SV is indicated on the CH2 PV/SV display, the green LED lights.

(12) **CH2 AT indicator**
When CH2 is performing AT or Auto-reset, the yellow LED flashes.
However, During the setting mode(or group setting mode), indications depend on the setting mode.

(13) **Increase key** (△): Increases the numeric value.

(14) **Decrease key** (▽): Decreases the numeric value.
While this key is pressed in the PV/SV display mode, the SV can be indicated when PV is indicated, and vice versa.

(15) **Mode key** (◎)
Selects the setting group or mode, and registers the set value.
(By pressing the Mode key, the set value or selected value can be registered.)

(16) **Reset key** (RST)
Resets the timer action in the case of CH1 timer function.

⚠ Notice

When setting the specifications and functions of this controller, connect terminals 1 and 2 for power source first, then set them referring from “5. Outline of key operation and setting groups” to “7. Setup” before performing “3 Mounting to the control panel and “4. Wiring”.

3. Mounting to the control panel

3.1 Site selection

⚠ Caution

Use within the following temperature and humidity ranges.
Temperature: 0 to 50℃ (32 to 122℉) (No icing), Humidity: 35 to 85%RH (No condensation)
If the WCS-13A is installed through a control panel, the ambient temperature of the unit must be kept to under 50℃. Otherwise the life of electronic parts (especially electrolytic capacitors) of the unit will be shortened.

This instrument is intended to be used under the following environmental conditions (IEC61010-1): Overvoltage category Ⅱ, Pollution degree 2

Ensure the mounting location corresponds to the following conditions:

- A minimum of dust, and an absense of corrosive gases
- No flammable, expolsive gases
- No mechanical vibrations or shocks
- No exposure to direct sunlight, an ambient temperature of 0 to 50℃ (32 to 122℉) that does not change rapidly
- An ambient non-condensing humidity of 35 to 85%RH
- No large capacity electromagnetic switches or cables through which large current is flowing
- No water, oil or chemicals or where the vapors of these substances can come into direct contact with the unit

3.2 External dimensions (Scale: mm)

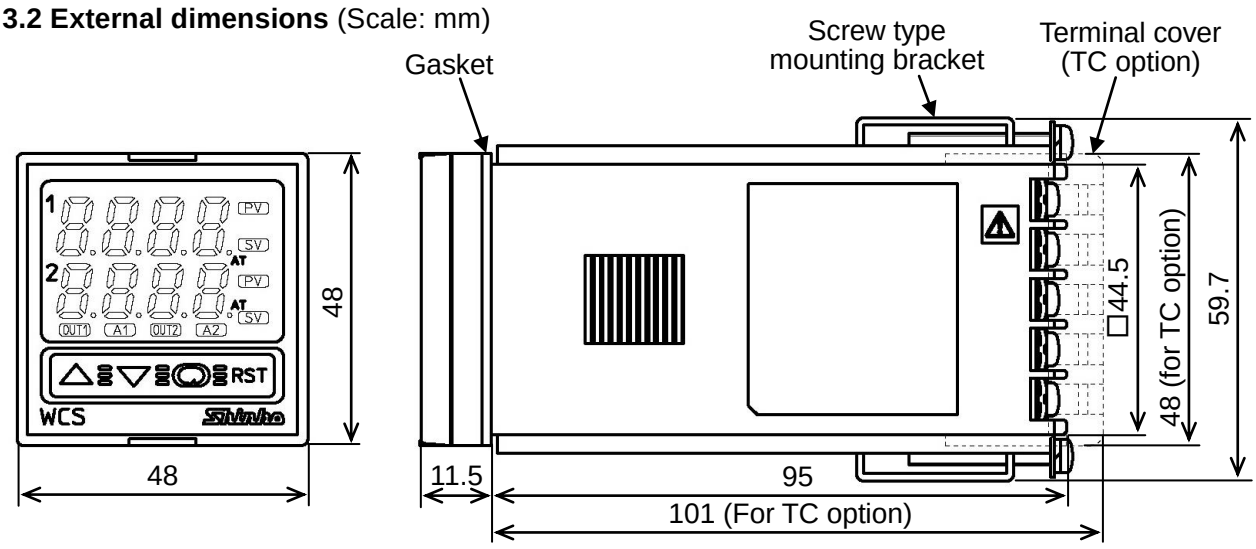

(Fig. 3.2-1)

3.3 Panel cutout (Scale: mm)

⚠ Caution

If lateral close mounting is used for the controller, IP66 specification (Dust-proof/Drip-proof) maybe compromised, and all warranties will be invalidated.

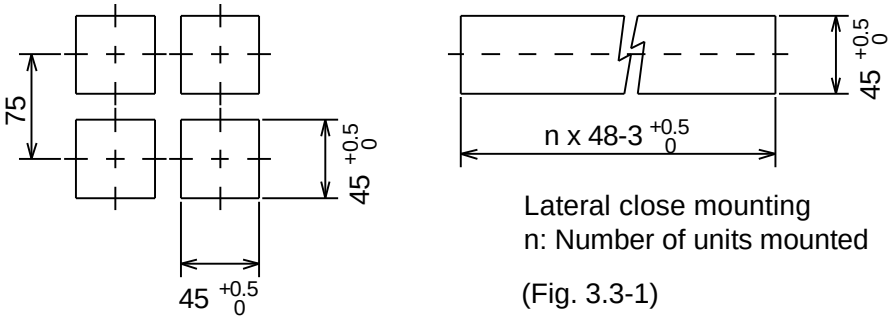

Lateral close mounting
n: Number of units mounted

(Fig. 3.3-1)

3.4 Mounting and removal

⚠ Caution

As the case is made of resin, do not use excessive force while screwing in the mounting bracket, or the case could be damaged.
The torque should be approximately 0.12N•m.

How to mount the unit

Mount the controller vertically to the flat, rigid panel to ensure it adheres to the Dust-proof/Drip-proof specification (IP66).
Mountable panel thickness: 1 to 8mm

(1) Insert the controller from the front side of the control panel.
(2) Attach the mounting brackets by the holes at the top and bottom of the case and secure the controller in place with the screws.

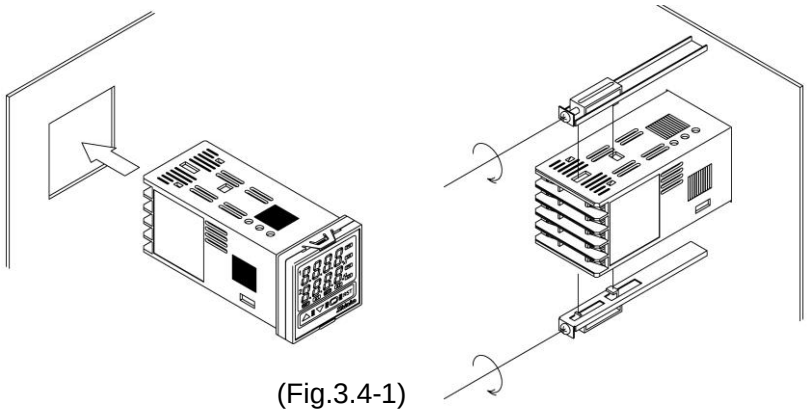

(Fig.3.4-1)

How to remove the unit

(1) Turn the power to the unit OFF, and disconnect all wires before removing the mounting brackets.
(2) Remove the mounting brackets by loosening the screws.
(3) Remove the unit from the front side of the control panel.

4. Wiring

⚠ Warning

Turn the power supply to the instrument off before wiring or checking.
Working or touching the terminal with the power switched on may result in severe injury or death due to Electric Shock.

⚠ Notice

- The terminal block of the WCS-13A is designed to be wired from the left side.
  The lead wire must be inserted from the left side of the terminal, and fastened by the terminal screw.
- Use a thermocouple and compensating lead wire that correspond to the sensor input specification of this controller.
- Use the 3-wire RTD which corresponds to the input specification of this controller.
- This controller does not have a built-in power switch, circuit breaker or fuse. Therefore, it is necessary to install them in the circuit near the external controller.
  (Recommended fuse: Time-lag fuse, rated voltage 250V AC, rated current 2A)
- For a 24V AC/DC power source, do not confuse polarity when using direct current (DC).
- When using a relay contact output type, externally use a relay according to the capacity of the load to protect the built-in relay contact.
- When wiring, keep input wires (thermocouple, RTD, etc.) away from AC sources or load wires to avoid external interference.
- Do not apply a commercial power source to the sensor connected to the input terminal nor allow the power source to come into contact with the sensor.

4.1 If CH2 is of Multi-range input (-M), DC voltage input (-V) or PV difference input (-S) spec

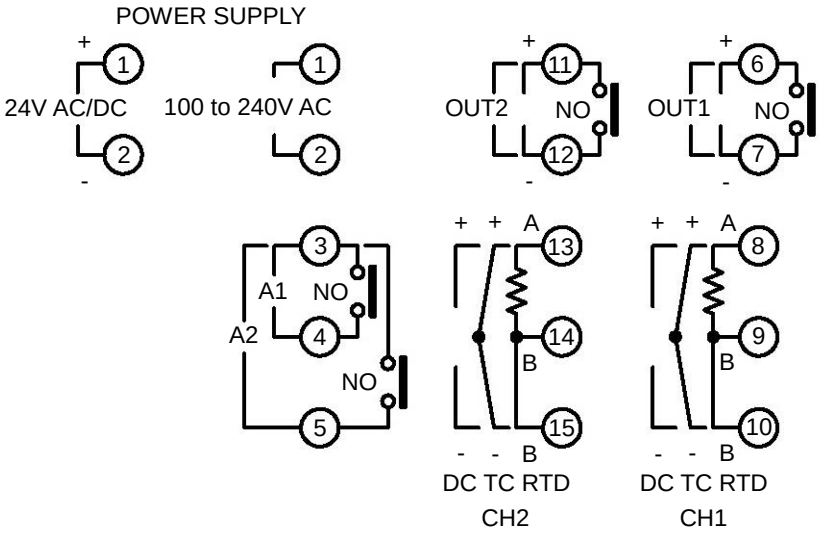

- A1 : CH1 alarm output
- A2 : CH2 alarm output [Not available if CH2 is based on PV difference input (-S) spec]
- OUT1: CH1 control output
- OUT2: CH2 control output
- DC : CH1, CH2 DC current, voltage input
  (For DC current input, connect 50Ω shunt resistor between input terminals.)
- TC : CH1, CH2 thermocouple input
- RTD: CH1, CH2 resistance temperature detector input

(Fig. 4.1-1)

4.2 If CH2 is based on delay timer (-T) spec

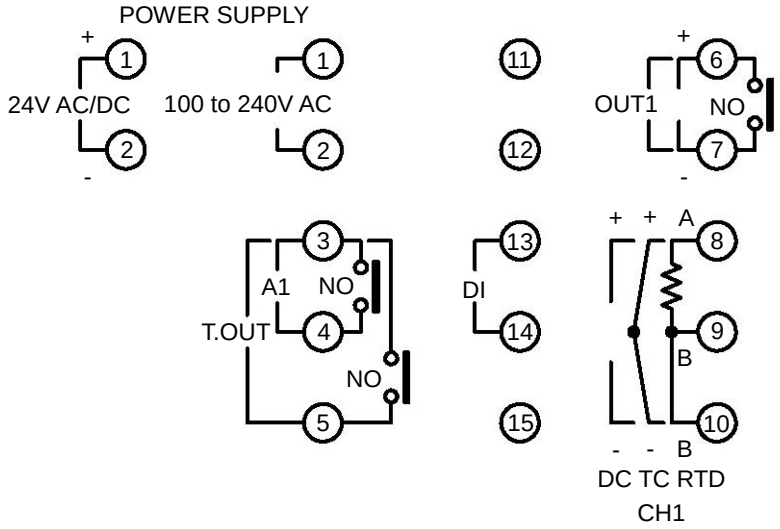

- A1 : CH1 alarm output
- T.OUT: Timer output
- OUT1: CH1 control output
- DI : Digital input
- DC : CH1 DC current, voltage input
  (For DC current input, connect 50Ω shunt resistor between input terminals.)
- TC : CH1 thermocouple input
- RTD : CH1 resistance temperature detector input

(Fig. 4.2-1)

4.3 Lead wire solderless terminal

Use a solderless terminal with an insulation sleeve in which an M3 screw fits as shown below.
The torque should be approximately 0.63N•m.

Solderless terminal	Manufacturer	Model	Tightening torque
Y type	Nichifu Terminal Industries CO.,LTD.	TMEV1.25Y-3	Approx. 0.63N•m
	Japan Solderless Terminal MFG CO.,LTD.	VD1.25-B3A	
Round type	Nichifu Terminal Industries CO.,LTD.	TMEV1.25-3	
	Japan Solderless Terminal MFG CO.,LTD.	V1.25-3	

(Fig. 4.3-1)

5. Outline of key operation and setting groups

5.1 Outline of key operation

Setting items are divided into groups, and group selection has to be made with keypads.
Press the key in the PV/SV display mode. The unit proceeds to the Group selection mode.
Select a group with the , and press the ▽. The unit proceeds to each setting item.
To set each setting item, use the △ or ▽ key, and register the value with the key.

5.2 Setting groups

The following shows the setting group configuration.

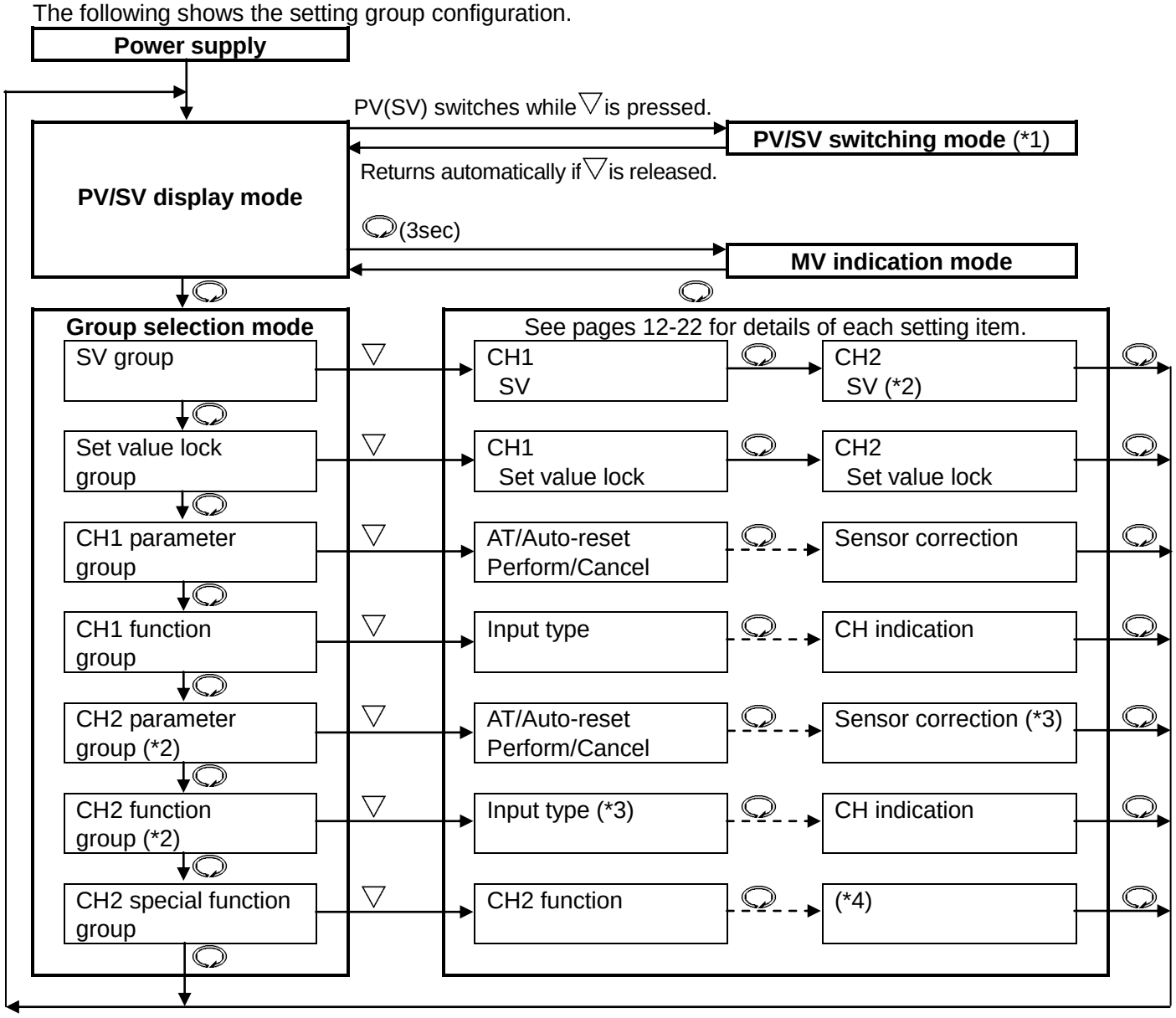

- ↓, →, →, ← : This means that if the or ▽ key is pressed, the unit proceeds to the next setting item.
- → : This means "Press the key several times".

(*1): While pressing the ▽ key, the PV/SV indications will switch.
When CH2 is based on PV difference input (-S) spec : If "PV (CH1 PV–CH2 PV)" is selected during CH indication selection, SV can be indicated, and vice versa.
If "PV (CH1 PV)" or "PV (CH2 PV)" is selected, "PV (CH1 PV–CH2 PV)" can be indicated.

(*2): Not available if CH2 is based on delay timer (-T) or PV difference input (-S) spec
Not available if CH1 cooling output, CH1 transmission output or CH1 timer is selected during CH2 function selection.

(*3): Not available if CH1 output 2 is selected during CH2 function selection

(*4): Depending on the selection during CH2 function selection, the following appears.
If CH2 controller or CH1 output 2 is selected: The unit reverts to the PV/SV display mode.
If CH1 cooling output is selected: OUT2 proportional cycle setting item appears.

If CH1 transmission output is selected: Transmission output low limit setting item appears.
If CH1 timer is selected: CH1 timer start temperature setting item appears.
If CH2 is based on delay timer (-T) spec: OFF delay timer setting item appears.

5.3 Basic operation procedures

Basic operation procedures are shown below.
(e.g.) Setting example

CH2 function : Uses as a “CH2 controller (2ch controller)”
Input : Pt100; -199.9 to 850.0℃ (Common to CH1, CH2)
Control action : PID action (P, I, D and ARW values are automatically set by performing AT) (Common to CH1, CH2)
Alarm type : High limit value (Common to CH1, CH2)
Alarm value : 10.0℃ (Common to CH1, CH2)
SV : CH1; 200.0℃, CH2; 210.0℃

Operation procedures

1. Operation before running	Turn the load circuit power OFF, and turn the power to the controller ON.
2. CH2 special function group	Select the CH2 function in the CH2 special function group. ① Select [cnfr: CH2 controller (2ch controller)] during the [FUnc: CH2 function] selection.
3. CH1 function group CH2 function group	Select an input and alarm type in the CH1, CH2 function groups. ② Select [Pt .C: Pt100 -199.9 to 850.0℃] during the [tEnt: Input type] selection. ③ Select [H: High limit alarm] during the [AFn: Alarm type] selection. If any alarm type except [- - - -: No alarm action] is selected, setting items from ④ to ⑥ are indicated. Set them as needed. [**Note**] When alarm type is changed, the alarm value reverts to the default value 0 (0.0). Therefore set it again. ④ Select Alarm Energized/De-energized during the [ALn: Alarm Energized/De-energized] selection. ⑤ Set the alarm hysteresis during the [AHY: Alarm hysteresis] setting. ⑥ Set the Alarm action delayed timer during the [AdY: Alarm action delayed timer] setting.
4. SV group	Set the SV in the SV group. ⑦ Set to 200.0℃ during the [t1: CH1 SV] setting. ⑧ Set to 210.0℃ during the [t2: CH2 SV] setting.
5. Executing the controller	Turn the load circuit power ON. Control action starts so as to keep the control target at the SV.
6. AT Perform	Perform AT in the CH1, CH2 parameter groups respectively. ⑨ Select [AT: AT Perform] during [AT: AT/Auto-reset Perform/Cancel] selection. The AT indicator flashes while AT is performing. The AT indicator goes off after AT is finished. [**Note**] After AT is finished, P, I, D and ARW values are automatically set. Since these values are internally memorized, it is not necessary to perform AT again as long as the process is the same.
7. CH1 parameter group CH2 parameter group	Set each alarm value in the CH1, CH2 parameter groups. ⑩ Set the value to 10.0℃ during the [A1: Alarm value] setting.

Setting items ① to ⑩ are indicated in “6. Key operation flowchart” (Pages 10, 13).

6. Key operation flowchart

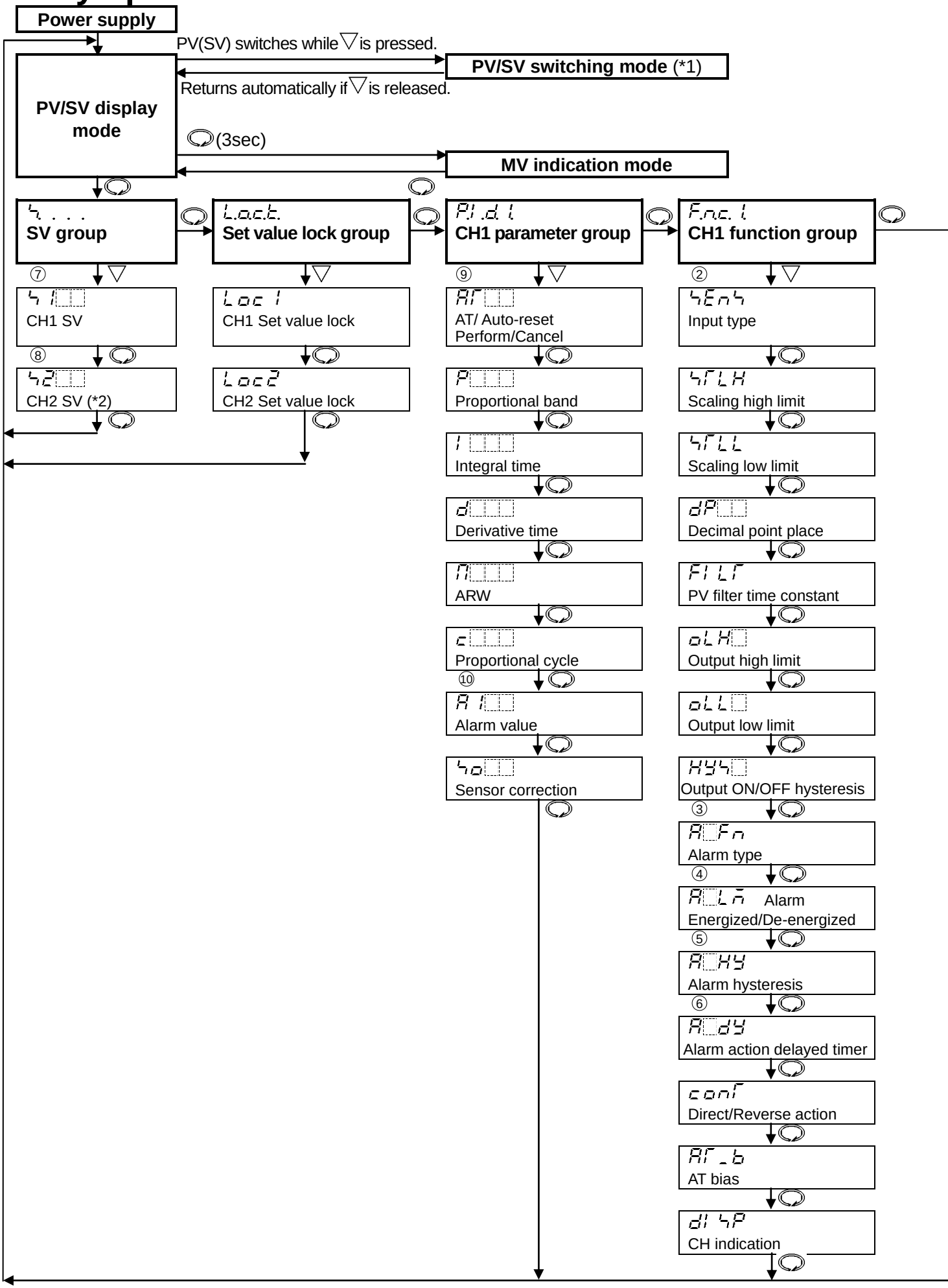

7. Setup

Setup should occur before using this controller, to set the CH2 function, Input type, Alarm type, and Control action of CH1 and CH2, etc. according to the users' conditions.
Setup can be conducted in the CH2 Special function group, CH1 function group and CH2 function group.
If the users' specification is the same as the default value of the WCS-13A, it is not necessary to set up the controller. Proceed to Chapter "8. Settings".

7.1 Turn the power supply to the WCS-13A ON.

- For approx. 6 seconds after the power is switched ON, the sensor input characters and temperature unit are indicated on the CH1 or CH2 PV/SV display.
  During this time, all outputs and LED indicators are in OFF status.
- After that, PV or SV is indicated on the PV/SV display, depending on the CH indication selection in the CH1 or CH2 function group.

(Fig. 7.1-1) Multi-range input

Sensor input	℃		℉	
	PV/SV display	Setting range	PV/SV display	Setting range
K	t□□C	-200 to 1370℃	t□□F	-320 to 2500℉
	t□ .C	-199.9 to 400.0℃	t□ .F	-199.9 to 750.0℉
J	J□□C	-200 to 1000℃	J□□F	-320 to 1800℉
R	r□□C	0 to 1760℃	r□□F	0 to 3200℉
S	s□□C	0 to 1760℃	s□□F	0 to 3200℉
B	b□□C	0 to 1820℃	b□□F	0 to 3300℉
E	E□□C	-200 to 800℃	E□□F	-320 to 1500℉
T	T□ .C	-199.9 to 400.0℃	T□ .F	-199.9 to 750.0℉
N	n□□C	-200 to 1300℃	n□□F	-320 to 2300℉
PL-Ⅱ	PL2C	0 to 1390℃	PL2F	0 to 2500℉
C(W/Re5-26)	c□□C	0 to 2315℃	c□□F	0 to 4200℉
Pt100	Pt .C	-199.9 to 850.0℃	Pt .F	-199.9 to 999.9℉
	Pt□C	-200 to 850℃	Pt□F	-300 to 1500℉
JPt100	JPt.C	-199.9 to 500.0℃	JPt.F	-199.9 to 900.0℉
	JPtC	-200 to 500℃	JPtF	-300 to 900℉
4 to 20mA DC	420A	-1999 to 9999		
0 to 20mA DC	020A			
0 to 1V DC	0□ 1V			

(Fig. 7.1-2) DC voltage input

Sensor input	PV/SV display	Setting range
0 to 5V DC	0□5V	-1999 to 9999
1 to 5V DC	1□5V	
0 to 10V DC	0 10V	

7.2 CH2 special function group

To enter the CH2 special function group, follow the procedures below.

(1) sFn2. Press the key in the PV/SV display mode until the left characters appear.
(2) FUnc Press the ▽ key. The CH2 function setting item will appear.

Character	Name, Function, Setting range	Default value
FUnc	**CH2 function** • Selects the CH2 function. • **If CH2 is of Multi-range input (-M), DC voltage input (-V) or PV difference input (-S) spec** cnFr : CH2 controller (2ch controller) cnF2 : CH1 output 2 (1-input, 2-output) oUt2 : CH1 cooling output (1ch Heating/Cooling control output) PUt□ : CH1 transmission output (Effective when CH2 is DC current output type) t1 nE : CH1 timer • **If CH2 is based on delay timer (-T) spec** t1 n1 : Delay timer 1 t1 n2 : Delay timer 2	CH2 controller (-M, -V, -S model) Delay timer 1 (-T model)

- **CH1 timer function**

CH1 timer starts if CH1 input exceeds CH1 timer start temperature, and after CH1 timer set time has passed, the control (CH1 output low limit value for DC current output) and alarm action stop.
However, for the Direct control action, CH1 timer starts if CH1 input drops below the CH1 timer start temperature.
CH1 PV/SV display indicates CH1 PV, and CH2 PV/SV display flashes CH1 timer remaining time.
To start control again after CH1 timer time is up, turn the power ON again, or press the Reset key.
If CH1 timer time is set to 0 (zero), the timer does not work.
If CH1 timer set value is changed while CH1 timer is working, the setting will be effective next time.
If CH1 timer time has passed during AT, the AT will be forcibly stopped, and each parameter returns to the previous value at which AT was performed.
CH2 control output will be turned OFF (0mA DC or CH2 output low limit value for DC current output).

- **Delay timer function**

When Delay timer function 1 is selected:

ON delay timer starts when DI input is ON (Closed), and timer remaining time will be indicated on the CH2 PV/SV display.
Timer output turns ON after ON delay timer time has passed.
After that, if DI input is turned OFF (Open), OFF delay timer starts, and timer remaining time will be indicated on the CH2 PV/SV display.
Timer output turns OFF after OFF delay timer time has passed.

When Delay timer function 2 is selected:

Control and alarm action start/stop is interlocked with the timer output.
If Delay timer is restarted, alarm action returns to its initial status (for the alarm with standby, returns to standby status again).

Between DI terminals Open : OFF
Between DI terminals Closed: ON
Circuit current when closed : 6mA

Delay timer function 1

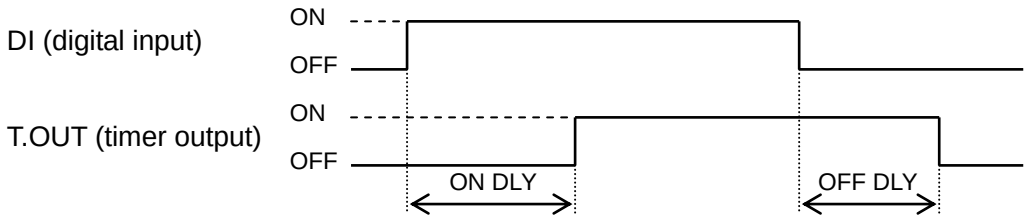

ON DLY : ON delay timer setting
OFF DLY: OFF delay timer setting

(Fig. 7.2-1)

Delay timer function 2

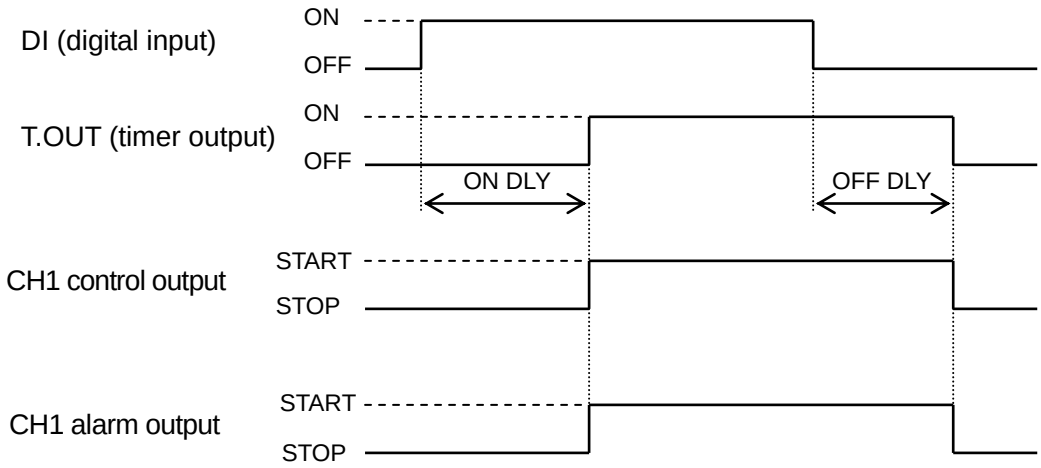

ON DLY : ON delay timer setting
OFF DLY: OFF delay timer setting

(Fig. 7.2-2)

• ↓◎, ↓▽: This means that if the ◎ or ▽ key is pressed, the unit proceeds to the next setting item.

(*1) While pressing the ▽ key, the PV/SV indications will switch.
When CH2 is based on PV difference input (-S) spec : If “PV (CH1 PV–CH2 PV)” is selected during CH indication selection, SV can be indicated, and vice versa.
If “PV (CH1 PV)” or “PV (CH2 PV)” is selected, “PV (CH1 PV–CH2 PV)” can be indicated.
(*2): Not available if CH2 is based on delay timer (-T) or PV difference input (-S) spec
Not available if CH1 cooling output, CH1 transmission output or CH1 timer is selected during CH2 function selection.
(*3): Not available if CH1 output 2 is selected during CH2 function selection

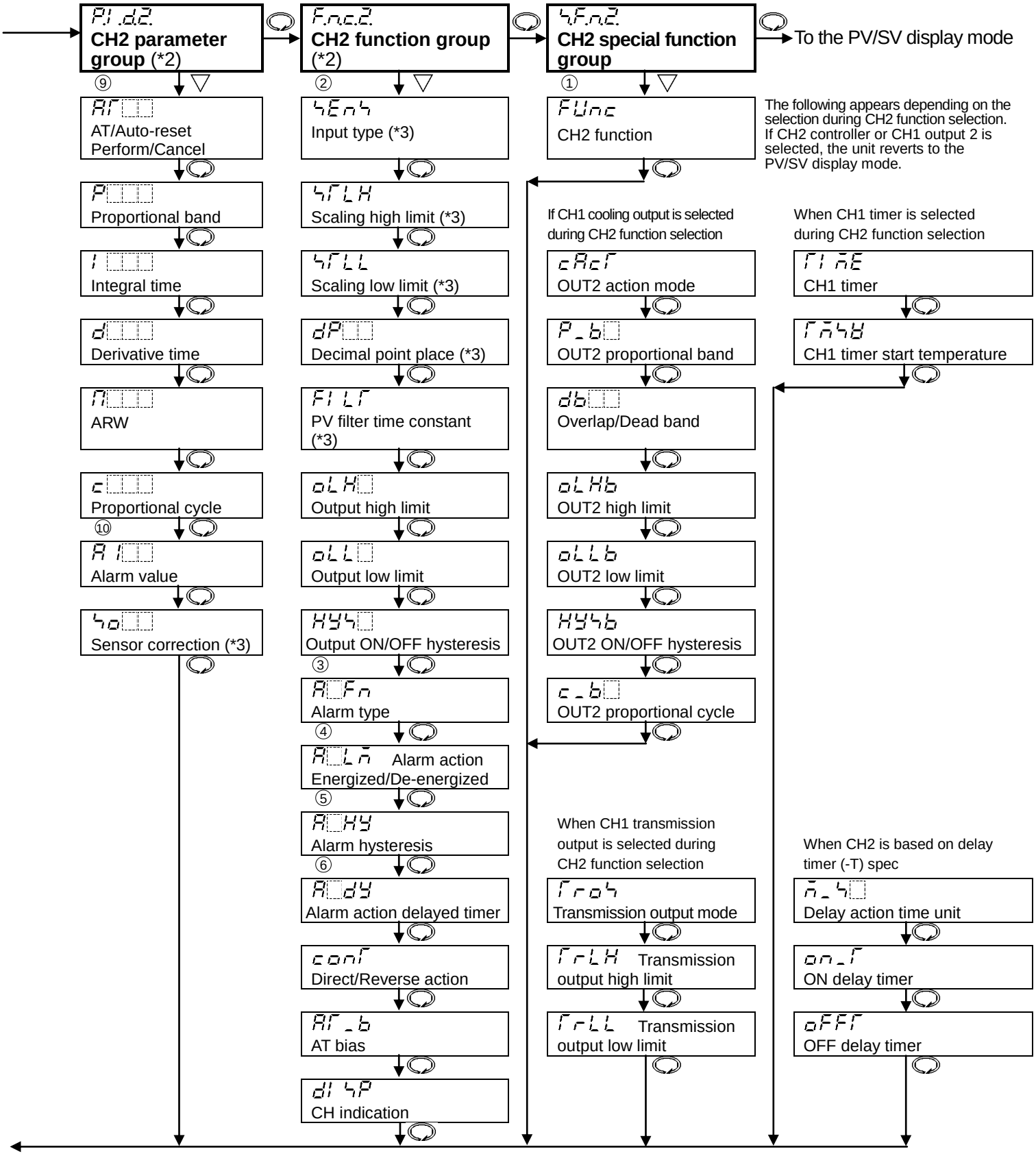

Depending on the selection during CH2 function selection (on p.11), refer to the following.

If “CH1 cooling output” is selected : Proceed to 7.2.1.
If “CH1 transmission output” is selected: Proceed to 7.2.2.
If “CH1 timer” is selected : Proceed to 7.2.3.
If CH2 is based on delay timer (-T) spec: Proceed to 7.2.4.
If “CH2 controller” or “CH1 output 2” is selected, setting items will not appear. The unit reverts to the PV/SV display mode.

7.2.1 When CH1 cooling output is selected

If CH1 cooling output is selected during CH2 function selection, the unit will be of 1ch Heating/Cooling control output specification. So CH1 will match OUT1 (Heating output), and CH2 will match OUT2 (Cooling output).

Character	Name, Function, Setting range	Default value
cAcT	**OUT2 action mode** • Selects OUT2 action from air, oil and water cooling. Air□: Air cooling (linear characteristic) oil□: Oil cooling (1.5th power of the linear characteristic) WAT□: Water cooling (2nd power of the linear characteristic) 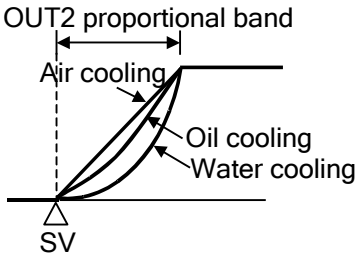	Air cooling
P_b□	**OUT2 proportional band** • Sets the OUT2 proportional band. OUT2 becomes ON/OFF action when OUT1 proportional band is set to 0 or 0.0. • Setting range: 0.0 to 10.0 times [multiplying factor to OUT1 (CH1) proportional band]	1.0 times
db□□	**Overlap band/Dead band** • Sets the overlap band or dead band for OUT1 and OUT2. + Set value: Dead band, –Set value: Overlap band • Setting range: -100.0 to 100.0℃(℉), DC current, voltage input: -1000 to 1000 (The placement of the decimal point follows the selection.)	Multi-range input: 0.0℃ DC voltage input: 0
oLHb	**OUT2 high limit** • Sets OUT2 high limit value. (Common to CH2 output high limit value on p.18) • Not available if OUT2 is in ON/OFF action • Setting range: OUT2 low limit value to 100% (DC current output: OUT2 low limit value to 105%)	100%
oLLb	**OUT2 low limit** • Sets OUT2 low limit value. (Common to CH2 output low limit value on p.18) • Not available if OUT2 is in ON/OFF action • Setting range: 0% to OUT2 high limit value (DC current output: -5% to OUT2 high limit value)	0%
HYSb	**OUT2 ON/OFF action hysteresis** • Sets ON/OFF action hysteresis for OUT2. (Common to CH2 ON/OFF action hysteresis on p.18) Available when OUT2 is in ON/OFF action. • Setting range: 0.1 to 100.0℃ (℉), DC current, voltage input: 1 to 1000 (The placement of the decimal point follows the selection.)	Multi-range input: 1.0℃ DC voltage input: 10
c_b□	**OUT2 proportional cycle** • Sets proportional cycle for OUT2. (Common to CH2 proportional cycle on p.22) Not available for DC current output or if OUT2 is in ON/OFF action. • Setting range: 1 to 120 seconds	Relay contact output: 30sec Non-contact voltage: 3sec

7.2.2 When CH1 transmission output is selected

Character	Name, Function, Setting range	Default value
Tro5	**Transmission output mode** • Selects the transmission output. • PV: PV transmission SV: SV transmission MV: MV transmission	PV transmission
TrLH	**Transmission output high limit** • Sets Transmission output high limit value. • Setting range: Transmission output low limit to Input range high limit value	Multi-range input: 1370℃ DC voltage input: 9999
TrLL	**Transmission output low limit** • Sets Transmission output low limit value. • Setting range: Input range low limit to Transmission output high limit value	Multi-range input: -200℃ DC voltage input: -1999

7.2.3 When CH1 timer is selected

Character	Name, Function, Setting range	Default value
T1 tE	**CH1 timer** • Sets CH1 control time after input has reached CH1 timer start temperature. (Refer to the CH1 timer function on p.12.) • Setting range: 0 to 9999sec	0sec
TtSH	**CH1 timer start temperature** • Sets CH1 timer start temperature. (Refer to the CH1 timer function on p.12.) • Setting range: Scaling low limit to Scaling high limit value	Multi-range input: 0.0℃ DC voltage input: 0

7.2.4 When CH2 is based on delay timer (-T) spec

Character	Name, Function, Setting range	Default value
t_5	**Delay action time unit** • Selects Delay action time unit for delay timer function. (Refer to the Delay timer function on p.12.) • tI n: Minute SEc: second	Minute
on_T	**ON delay timer** • Sets ON delay timer for delay timer function. (Refer to the Delay timer function on p.12.) • Setting range: 0 to 9999	0
oFFT	**OFF delay timer** • Sets OFF delay timer for delay timer function. (Refer to the CH2 delay timer function on p.12.) • Setting range: 0 to 9999	0

7.3 CH1 function group

To enter the CH1 function group, follow the procedures below.

(1) Fnc. 1 Press the key in the PV/SV display mode until the left characters appear.

(2) SEnS Press the ▽ key. CH1 input type setting item will appear.

Character	Name, Function, Setting range	Default value
SEnS	**Input type** • **Multi-range input**: The input type can be selected from thermocouple (10 types), RTD (2 types), DC current (2 types) and DC voltage (1 types), and the unit ℃/℉ can be selected as well. Refer to (Table 7.1-1) on p.11. • **DC voltage input**: Selects an input type from 3 DC voltage types. Refer to (Table 7.1-2) on p.11.	Multi-range input: K(-200 to 1370℃) DC voltage input: 0 to 5V DC
SrLH	**Scaling high limit** • Sets Scaling high limit value. • For thermocouple, RTD input, this matches SV high limit value. • Setting range: Scaling low limit to Input range high limit value	Multi-range input: 1370℃ DC voltage input: 9999
SrLL	**Scaling low limit** • Sets Scaling low limit value. • For thermocouple, RTD input, this matches SV low limit value. • Setting range: Input range low limit to Scaling high limit value	Multi-range input: -200℃ DC voltage input: -1999
dP□	**Decimal point place** • Selects decimal point place. Available for DC current, voltage input • □□□0: No decimal point □□0.0: 1 digit after decimal point □0.00: 2 digits after decimal point 0.000: 3 digits after decimal point	No decimal point
FILr	**PV filter time constant** • Sets PV filter time constant. If the value is set too large, it affects control result due to the delay of response. • Setting range: 0.0 to 10.0 seconds	0.0sec
oLH□	**Output high limit** • Sets the output high limit value. Not available if output is in ON/OFF action • Setting range: Output low limit value to 100% (DC current output type: Output low limit value to 105%)	100%
oLL□	**Output low limit** • Sets the output low limit value. Not available if output is in ON/OFF action • Setting range: 0% to Output high limit value (DC current output type: -5% to Output high limit value)	0%
HYS□	**Output ON/OFF action hysteresis** • Sets output ON/OFF action hysteresis. Available only when output is in ON/OFF action • Setting range: 0.1 to 100.0℃ (℉), DC current, voltage input: 1 to 1000 (The placement of the decimal point follows the selection.)	Multi-range input: 1.0℃ DC voltage input: 10
A□Fn	**Alarm type** • Selects an Alarm type. **Note: If an alarm type is changed, the alarm set value becomes 0 (0.0).** - - - -: No alarm action H□□□: High limit alarm L□□□: Low limit alarm HL□□: High/Low limits alarm oI d□: High/Low limit range AS□□: Process high alarm rAS□: Process low alarm H□□u: High limit alarm with standby L□□u: Low limit alarm with standby HL□u: High/Low limits alarm with standby	No alarm action

Character	Name, Function, Setting range	Default value
A□LA	**Alarm action Energized/De-energized** • Selects Energized/De-energized status for Alarm action. (Refer to “Alarm action Energized/De-energized” below.) • Not available if No alarm action is selected during Alarm type selection • nonL: Energized rEbY: De-energized	Energized
A□HY	**Alarm hysteresis** • Sets alarm hysteresis. • Not available if No alarm action is selected during Alarm type selection • Setting range: 0.1 to 100.0℃(℉) DC current, voltage input: 1 to 1000 (The placement of the decimal point follows the selection)	Multi-range input: 1.0℃ DC voltage input: 10
A□dY	**Alarm action delayed timer** • Sets Alarm action delayed timer. When setting time has elapsed after the input enters the alarm output range, the alarm is activated. • Not available if No alarm action is selected during Alarm type selection • Setting range: 0 to 9999 seconds	0sec
conF	**Direct/Reverse control action** • Selects either Reverse (Heating) or Direct (Cooling) control action. • HEAF: Reverse action (Heating) coolL: Direct action (Cooling)	Reverse action
AF_b	**AT bias** • Sets bias value for AT. • Available when control is PID action Not available for DC current, voltage input • Setting range: 0 to 50℃ (0 to 100℉) (Thermocouple, RTD input with a decimal point: 0.0 to 50.0℃ (0.0 to 100.0℉)	20℃
dI SP	**CH indication** • Selects PV or SV to be indicated on the PV/SV display. While pressing the ▽ key, PV/SV indications will switch. If “PV (CH1 PV–CH2 PV)” is selected, SV can be indicated, and vice versa. If “PV (CH1 PV)” or “PV (CH2 PV)” is selected, “PV (CH1 PV–CH2 PV)” can be indicated. • **For specifications other than PV difference input (-M, -V, -T model)**: PV□□: PV SV□□: SV • **For PV difference input spec (-S model)**: PV□□: PV (CH1 PV–CH2 PV) SV□□: SV PV 1□: PV (CH1 PV) PV2□: PV (CH2 PV)	PV (-M, -V, -T model), PV (CH1 PV–CH2 PV) (-S model)

Alarm action Energized/De-energized

When [alarm action Energized] is selected, the alarm output (between terminals 3-4, or 3-5) is conducted (ON) while the alarm output indicator is lit.
The alarm output is not conducted (OFF) while the alarm output indicator is not lit.
When [alarm action De-energized] is selected, the alarm output (between terminals 3-4, or 3-5) is not conducted (OFF) while the alarm output indicator is lit.
The alarm output is conducted (ON) while the alarm output indicator is not lit.

High limit alarm (when Energized is set)

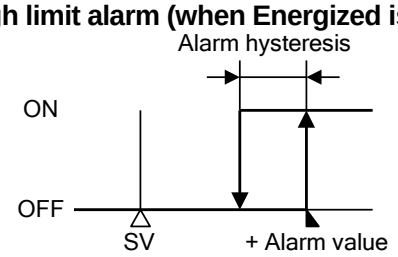

(Fig. 7.3-1)

High limit alarm (when De-energized is set)

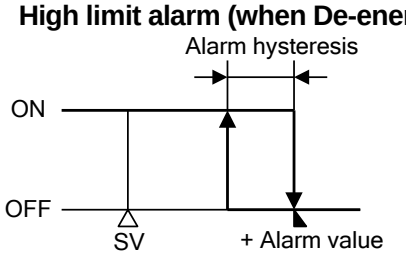

(Fig. 7.3-2)

7.4 CH2 function group

Not available if CH2 is based on delay timer (-T) or PV difference input (-S) spec

Not available if CH1 cooling output, CH1 transmission output or CH1 timer function is selected during CH2 function selection.

To enter the CH2 function group, follow the procedures below.

(1) F.nc.2. Press the key in the PV/SV display mode until the left characters appear.

(2) SEnS Press the ▽ key. CH2 input type selection item will appear.

Character	Name, Function, Setting range	Default value
SEnS	**Input type** • Selects an input type. Not available if CH1 output 2 is selected during CH2 function selection • **Multi-range input**: The input type can be selected from thermocouple (10 types), RTD (2 types), DC current (2 types) and DC voltage (1 type), and the unit ℃/℉ can be selected as well. Refer to (Table 7.1-1) on p.11. • **DC voltage input**: Selects an input type from 3 DC voltage types. Refer to (Table 7.1-2) on p.11.	Multi-range input: K (-200 to 1370℃) DC voltage input: 0 to 5V DC
SrLH	**Scaling high limit** • Sets scaling high limit value. Not available if CH1 output 2 is selected during CH2 function selection. • For thermocouple, RTD input, this matches SV high limit value. • Setting range: Scaling low limit to input range high limit value	Multi-range input: 1370℃ DC voltage input: 9999
SrLL	**Scaling low limit** • Sets scaling low limit value. Not available if CH1 output 2 is selected during CH2 function selection. • For thermocouple, RTD input, this matches SV low limit value. • Setting range: Input range low limit to Scaling high limit value	Multi-range input: -200℃ DC voltage input: -1999
dP□□	**Decimal point place** • Selects decimal point place. Available for DC current, voltage input Not available if CH1 output 2 is selected during CH2 function selection. • □□□0: No decimal point □□0.0: 1 digit after decimal point □0.00: 2 digits after decimal point 0.000: 3 digits after decimal point	No decimal point
FILr	**PV filter time constant** • Sets PV filter time constant. If the value is set too large, it affects control result due to the delay of response. Not available if CH1 output 2 is selected during CH2 function selection. • Setting range: 0.0 to 10.0 seconds	0.0sec
oLH□	**Output high limit** • Sets output high limit value. Not available if output is in ON/OFF action • Setting range: Output low limit to 100% (DC current output: Output low limit value to 105%)	100%
oLL□	**Output low limit** • Sets output low limit value. Not available if output is in ON/OFF action • Setting range: 0% to Output high limit value (DC current output: -5% to Output high limit value)	0%
HYS□	**Output ON/OFF action hysteresis** • Sets Output ON/OFF action hysteresis. Available only when output is in ON/OFF action • Setting range: 0.1 to 100.0℃ (℉) DC current, voltage input: 1 to 1000 (The placement of the decimal place follows the selection)	Multi-range input: 1.0℃ DC voltage input: 10

Character	Name, Function, Setting range	Default value
A□Fn	**Alarm type** • Selects an Alarm type. **Note: If an alarm type is changed, the alarm set value becomes 0 (0.0).** - - - -: No alarm action H□□□: High limit alarm L□□□: Low limit alarm HL□□: High/Low limits alarm dI d□: High/Low limit range A4□□: Process high alarm rA4□: Process low alarm H□□u: High limit alarm with standby L□□u: Low limit alarm with standby HL□u: High/Low limits alarm with standby	No alarm action
A□LA	**Alarm action Energized/De-energized** • Selects Energized/De-energized status for Alarm action. (Refer to “Alarm action Energized/De-energized” on p.17.) Not available if No alarm action is selected during Alarm type selection • nonL: Energized rEV4: De-energized	Energized
A□HY	**Alarm hysteresis** • Sets alarm hysteresis. Not available if No alarm action is selected during Alarm type selection • Setting range: 0.1 to 100.0℃(℉) DC current, voltage input: 1 to 1000 (The placement of the decimal point follows the selection)	Multi-range input: 1.0℃ DC voltage input: 10
A□dY	**Alarm action delayed timer** • Sets Alarm action delayed timer. When setting time has elapsed after the input enters the alarm output range, the alarm is activated. Not available if No alarm action is selected during Alarm type selection • Setting range: 0 to 9999 seconds	0sec
conF	**Direct/Reverse control action** • Selects either Reverse (Heating) or Direct (Cooling) control action. • HEAF: Reverse action (Heating) cooL: Direct action (Cooling)	Reverse action
AF_b	**AT bias** • Sets bias value for AT. Available when control is PID action Not available for DC current, voltage input • Setting range: 0 to 50℃ (0 to 100℉) (Thermocouple, RTD input with a decimal point: 0.0 to 50.0℃ (0.0 to 100.0℉)	20℃
dI 4P	**CH indication** • Selects PV or SV to be indicated on the PV/SV display. While the ▽ key is being pressed in the PV/SV display mode, the SV can be indicated when PV is indicated, and vice versa. • PV□□: PV 4V□□: SV If CH1 output 2 is selected during CH2 function selection, the PV will not be indicated.	PV

8. Settings

8.1 SV group

To proceed to the SV group, follow the procedures below.

(1) S . . . To enter the SV group, press the key once in the PV/SV display mode.

(2) S 1 Press the ▽ key. CH1 SV setting item will appear.

Character	Name, Function, Setting range	Default value
S 1	**CH1 SV** • Sets CH1 SV. • Setting range: CH1 scaling low limit to CH1 scaling high limit value	0℃
S2	**CH2 SV** • Sets CH2 SV. • Not available if CH2 is based on delay timer (-T) or PV difference input (-S) spec Not available if CH1 cooling output, CH1 transmission output or CH1 timer function is selected during CH2 function selection. • Setting range: CH2 scaling low limit to CH2 scaling high limit value	0℃

8.2 Set value lock group

To proceed to the Set value lock group, follow the procedures below.

(1) L.o.c.k. Press the key twice in the PV/SV display mode. The unit will proceed to the Set value lock group

(2) Loc 1 Press the ▽ key. CH1 Set value lock selection item appears.

Character	Name, Function, Setting range	Default value
Loc 1	**CH1 Set value lock** • Locks CH1 set values to prevent setting errors. The setting item to be locked depends on the selection. • When Lock 1 or Lock 2 is selected, AT and Auto-reset cannot be carried out. • - - - - (Unlock): All set values can be changed. Loc 1 (Lock 1): None of the set values can be changed. Loc2 (Lock 2): Only the SV group can be changed.	Unlock
Loc2	**CH2 Set value lock** • Locks CH2 set values to prevent setting errors. The setting item to be locked depends on the selection. • When Lock 1 or Lock 2 is selected, AT and Auto-reset cannot be carried out. • - - - - (Unlock): All set values can be changed. Loc 1 (Lock 1): None of the set values can be changed. Loc2 (Lock 2): Only the SV group can be changed.	Unlock

8.3 CH1 parameter group

To proceed to CH1 parameter group, follow the procedures below.

(1) P1.d.1 Press the key 3 times in the PV/SV display mode. The unit will proceed to the CH1 parameter group

(2) AT Press the ▽ key. AT/Auto-reset Perform/Cancel selection item will appear.

Character	Name, Function, Setting range	Default value
AT	**AT/Auto-reset Perform/Cancel** • Selects AT Perform/Cancel or auto-reset Perform/Cancel. • If the AT is cancelled during the process, P, I, D and ARW values revert to the previous value at which AT was performed. • When AT has not finished 4 hours after starting, it is cancelled automatically. • Auto-reset is finished in approximately 4 minutes. It cannot be released while performing this function • - - - - : AT/Auto-reset Cancel AT / rSET : AT/Auto-reset Perform	AT/Auto-reset Cancel
P	**Proportional band** • Sets the proportional band. • Control action becomes ON/OFF action when set to 0 or 0.0. • Setting range: 0 to 1000℃ (2000℉), Range with a decimal point: 0.0 to 999.9℃ (℉) DC current, voltage input: 0.0 to 100.0%	Multi-range input: 10℃ DC voltage input: 2.5%

Character	Name, Function, Setting range	Default value
I	**Integral time** • Sets the integral time. • Setting the value to 0 disables the function. • Not available if control is in ON/OFF action • Auto-reset can be performed when PD is control action (I=0). • Setting range: 0 to 1000 seconds	200sec
d	**Derivative time** • Sets the derivative time. • Setting the value to 0 disables the function. • Not available for ON/OFF action • Setting range: 0 to 300 seconds	50sec
n	**ARW** • Sets the ARW. • Available only when PID is the control action. • Setting range: 0 to 100%	50%
c	**Proportional cycle** • Sets the proportional cycle. • Not available for ON/OFF action Not available for DC current output type • Setting range: 1 to 120sec	Relay contact output: 30sec Non-contact voltage output: 3sec
A 1	**Alarm value** • Sets the alarm value. • Setting the value to 0 or 0.0 disables the function (except Process high and Process low alarm). • Not available if No alarm action is selected during Alarm type selection • Setting range: Refer to (Table 8.3-1).	0℃
ho	**Sensor correction** • Sets the correction value for the sensor. • Setting range: –100.0 to 100.0℃ (℉) DC current, voltage input:-1000 to 1000	Multi-range input: 0.0℃ DC voltage input: 0

(Table 8.3-1)

Alarm type	Setting range
High limit alarm	– (Input span) to input span℃(℉) *1
Low limit alarm	– (Input span) to input span℃(℉) *1
High/Low limits alarm	0 to input span℃(℉) *1
High/Low limit range alarm	0 to input span℃(℉) *1
Process high alarm	Input range low limit to input range high limit value *2
Process low alarm	Input range low limit to input range high limit value *2
High limit alarm with standby	– (Input span) to input span℃(℉) *1
Low limit alarm with standby	– (Input span) to input span℃(℉) *1
High/Low limits alarm with standby	0 to input span℃(℉) *1

- When input has a decimal point, the negative low limit value is –199.9, and the positive high limit value is 999.9.
- All alarm actions except process alarm are the ±deviation setting from the SV.

*1: For DC current, voltage input, the input span is the same as the scaling span.
*2: For DC current, voltage input, input range low (or high) limit value is the same as scaling low (or high) limit value.

Sensor correction function

This corrects the input value from the sensor. When a sensor cannot be set at the exact location where control is desired, the sensor measured temperature may deviate from the temperature in the controlled location.

When controlling with plural controllers, sometimes the measured temperatures do not concur due to differences in sensor accuracy or dispersion of load capacities. In such a case, the control can be set at the desired temperature by adjusting the input value of sensors.

However, it is effective within the input rated range regardless of the sensor correction value.

8.4 CH2 parameter group

Not available if CH2 is based on delay timer (-T) or PV difference input (-S) spec

Not available if CH1 cooling output, CH1 transmission output or CH1 timer function is selected during CH2 function selection.

To proceed to CH2 parameter group, follow the procedures below.

(1) P1.d2. Press the key 5 times in the PV/SV display mode. The unit will proceed to the CH2 parameter group

(2) AT Press the ▽ key. AT/Auto-reset Perform/Cancel selection item will appear.

Character	Name, Function, Setting range	Default value
AT	**AT/Auto-reset Perform/Cancel** • Selects AT Perform/Cancel or auto-reset Perform/Cancel. • If the AT is cancelled during the process, P, I, D and ARW values revert to the previous value at which AT was performed. • When AT has not finished 4 hours after starting, it is cancelled automatically. • Auto-reset is finished in approximately 4 minutes. It cannot be released while performing this function. • ---- : AT/Auto-reset Cancel AT rSET : AT/Auto-reset Perform	AT/Auto-reset Cancel
P	**Proportional band** • Sets the proportional band. • Control action becomes ON/OFF action when set to 0 or 0.0. • Setting range: 0 to 1000℃ (2000℉), Range with a decimal point: 0.0 to 999.9℃ (℉) DC current, voltage input: 0.0 to 100.0%	Multi-range input: 10℃ DC voltage input: 2.5%
I	**Integral time** • Sets the integral time. • Setting the value to 0 disables the function. • Not available for ON/OFF action. • Auto-reset can be performed when PD is control action (I=0). • Setting range: 0 to 1000 seconds	200sec
d	**Derivative time** • Sets the derivative time. • Setting the value to 0 disables the function. • Not available for ON/OFF action. • Setting range: 0 to 300 seconds	50sec
n	**ARW** • Sets the ARW. • Available only when PID is the control action. • Setting range: 0 to 100%	50%
c	**Proportional cycle** • Sets the proportional cycle. • Not available for ON/OFF action Not available for DC current output type • Setting range: 1 to 120sec	Relay contact output: 30sec Non-contact voltage output: 3sec
A1	**Alarm value** • Sets the alarm value. • Setting the value to 0 or 0.0 disables the function (except Process high and Process low alarm). • Not available if No alarm action is selected during Alarm type selection • Setting range: Refer to (Table 8.3-1).	0℃
ho	**Sensor correction** • Sets the correction value for the sensor. • Not available if CH1 output 2 is selected during CH2 function selection • Setting range: -100.0 to 100.0℃ (℉) DC current, voltage input:-1000 to 1000	Multi-range input: 0.0℃ DC voltage input: 0

9. Operation

9.1 Starting operation

After the unit is mounted to the control panel and wiring is completed, operate the unit following the procedures below.

(1) Switch power supply to the WCS-13A ON.

For approx. 6sec after the power is switched ON, the sensor input characters and temperature unit are indicated on the CH1 or CH2 PV/SV display.
During this time, all outputs and LED indicators are in OFF status.
After that, PV or SV is indicated on the PV/SV display, depending on the selection during CH indication selection in the CH1 or CH2 function group.

(2) Input each set value.

Refer to “8. Settings”.

(3) Turn the load circuit power ON.

Control action starts so as to keep the control target at the SV.

9.2 Switching PV/SV

To indicate SV constantly (e.g. CH1):

To indicate SV constantly, select SV in the CH indication mode of the CH1 function group.

(1) Fnc. 1 Press the key several times in the PV/SV display mode until the left characters appear.
(2) SEnS Press the ▽ key. CH1 input type selection item will appear.
(3) dI SP Press the key several times until the left characters (CH indication) appear.
(4) Select “SU (SV)” by pressing the △ key.
(5) Press the key. The unit reverts to the PV/SV display mode, and CH1 PV/SV display always indicates SV.

To indicate SV temporarily:

Press the ▽ key in the PV/SV display mode.
While this key is pressed, the PV/SV indications will switch.
For the PV difference input (-S) spec, if “PV (CH1 PV–CH2 PV)” is selected during CH indication selection, SV can be indicated, and vice versa.
If “PV (CH1 PV)” or “PV (CH2 PV)” is selected, “PV (CH1 PV–CH2 PV)” can be indicated.

9.3 Indicating MV

To indicate MV:

Press the key for 3 sec in the PV/SV display mode.
Keep pressing the key even though the SV group appears during the process.
The 2nd dot from the right flashes in 0.5 second cycles during MV indication.

To cancel MV indication:

Press the key again, or turn the power to the unit ON again.

9.4 AT Perform/Cancel

How to perform AT (e.g. CH1)

AT can be performed in the “AT/Auto-reset Perform/Cancel” setting item in the CH1 parameter group.

(1) PI.d. 1 Press the key 3 times in the PV/SV display mode. The unit proceeds to the CH1 parameter group.
(2) Ar Press the ▽ key. AT/Auto-reset Perform/Cancel setting item will appear.
(3) Select “Ar (AT Perform)” with the △ key.
(4) Press the key. The unit reverts to the PV/SV display mode, and initiates AT.
The AT indicator flashes while AT is performing.

How to cancel AT (e.g. CH1)

AT can be cancelled in the “AT/Auto-reset Perform/Cancel” setting item in the CH1 parameter group.

(1) PI.d. 1 Press the key 3 times in the PV/SV display mode. The unit proceeds to the CH1 parameter mode.
(2) Ar Press the ▽ key. AT/Auto-reset Perform/Cancel setting item will appear.
(3) Select “- - - - (AT Cancel)” with the ▽ key.
(4) Press the key several times. The unit reverts to the PV/SV display mode, and AT stops.
If AT is cancelled during this process, each value of P, I, D and ARW reverts to the values before the Auto-tuning was performed.

10. Action explanation

10.1 CH1, CH2 output action

	Heating (Reverse) action	Cooling (Direct) action
Control action	Proportional band ON OFF SV	Proportional band ON OFF SV
Relay contact output	⑥ ⑦ Cycle action is performed according to deviation.	⑥ ⑦ Cycle action is performed according to deviation.
Non-contact voltage output	+⑥ 12 V DC –⑦ +⑥ 12/0 V DC –⑦ +⑥ 0 V DC –⑦ Cycle action is performed according to deviation.	+⑥ 0 V DC –⑦ +⑥ 0/12 V DC –⑦ +⑥ 12 V DC –⑦ Cycle action is performed according to deviation.
DC current output	+⑥ 20 mA DC –⑦ +⑥ 20 to 4 mA DC –⑦ +⑥ 4 mA DC –⑦ Changes continuously according to deviation.	+⑥ 4 mA DC –⑦ +⑥ 4 to 20 mA DC –⑦ +⑥ 20 mA DC –⑦ Changes continuously according to deviation.
Indicator (OUT1) Green	Lit Unlit	Unlit Lit

: Acts ON or OFF.

For CH2 output and CH1 output 2, connect terminals between 11 and 12.

10.2 CH1, CH2 output ON/OFF action

	Heating (Reverse) action	Cooling (Direct) action
Control action	Hysteresis ON OFF SV	Hysteresis ON OFF SV
Relay contact output	⑥ ⑦ ⑥ ⑦	⑥ ⑦ ⑥ ⑦
Non-contact voltage output	+⑥ 12 V DC –⑦ +⑥ 0 V DC –⑦	+⑥ 0 V DC –⑦ +⑥ 12 V DC –⑦
DC current output	+⑥ 20 mA DC –⑦ +⑥ 4 mA DC –⑦	+⑥ 4 mA DC –⑦ +⑥ 20 mA DC –⑦
Indicator (OUT1) Green	Lit Unlit	Unlit Lit

: Acts ON or OFF.

For CH2 output and CH1 output 2, connect terminals between 11 and 12.

10.3 CH1, CH2 Alarm action

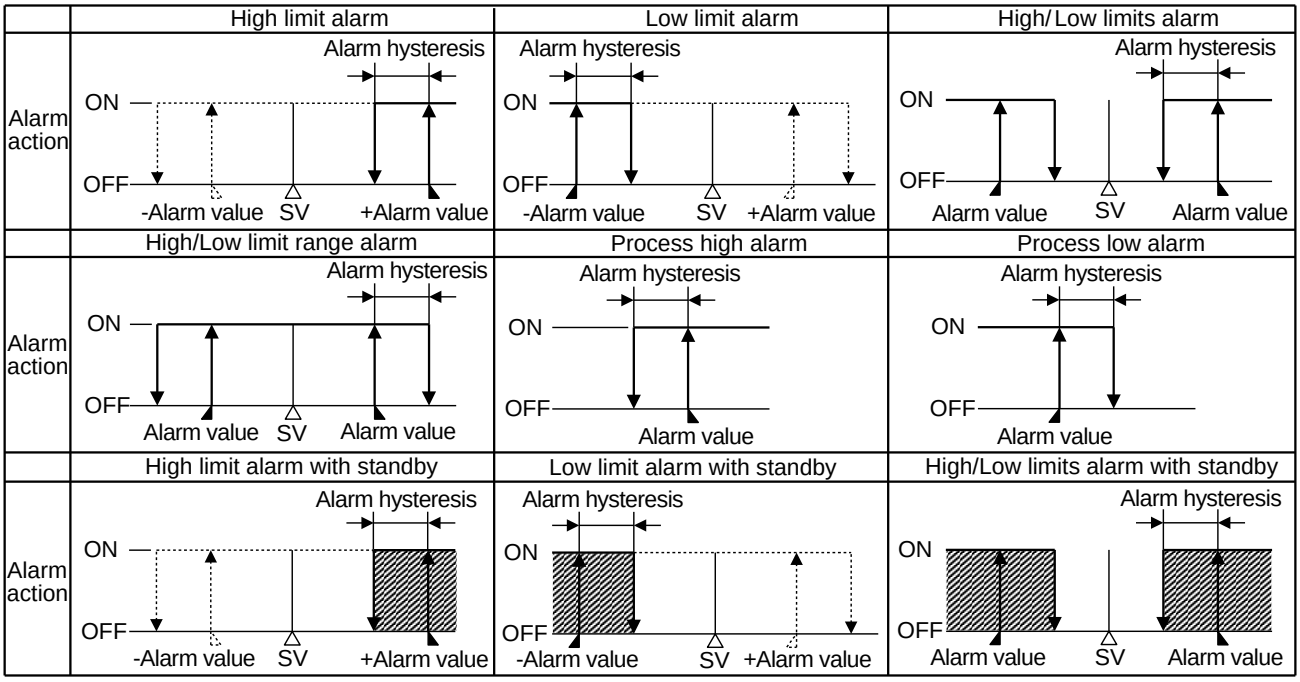

: Standby functions.

CH1 alarm output: Connect terminals between 3 and 4.

CH2 alarm output: Connect terminals between 3 and 5.

A1 indicator: Lights when CH1 alarm output terminals 3 and 4 are connected (ON), and goes off when those terminals are disconnected (OFF).

A2 indicator: Lights when CH2 alarm output terminals 3 and 5 are connected (ON), and goes off when those terminals are disconnected (OFF).

10.4 Heating/Cooling control action

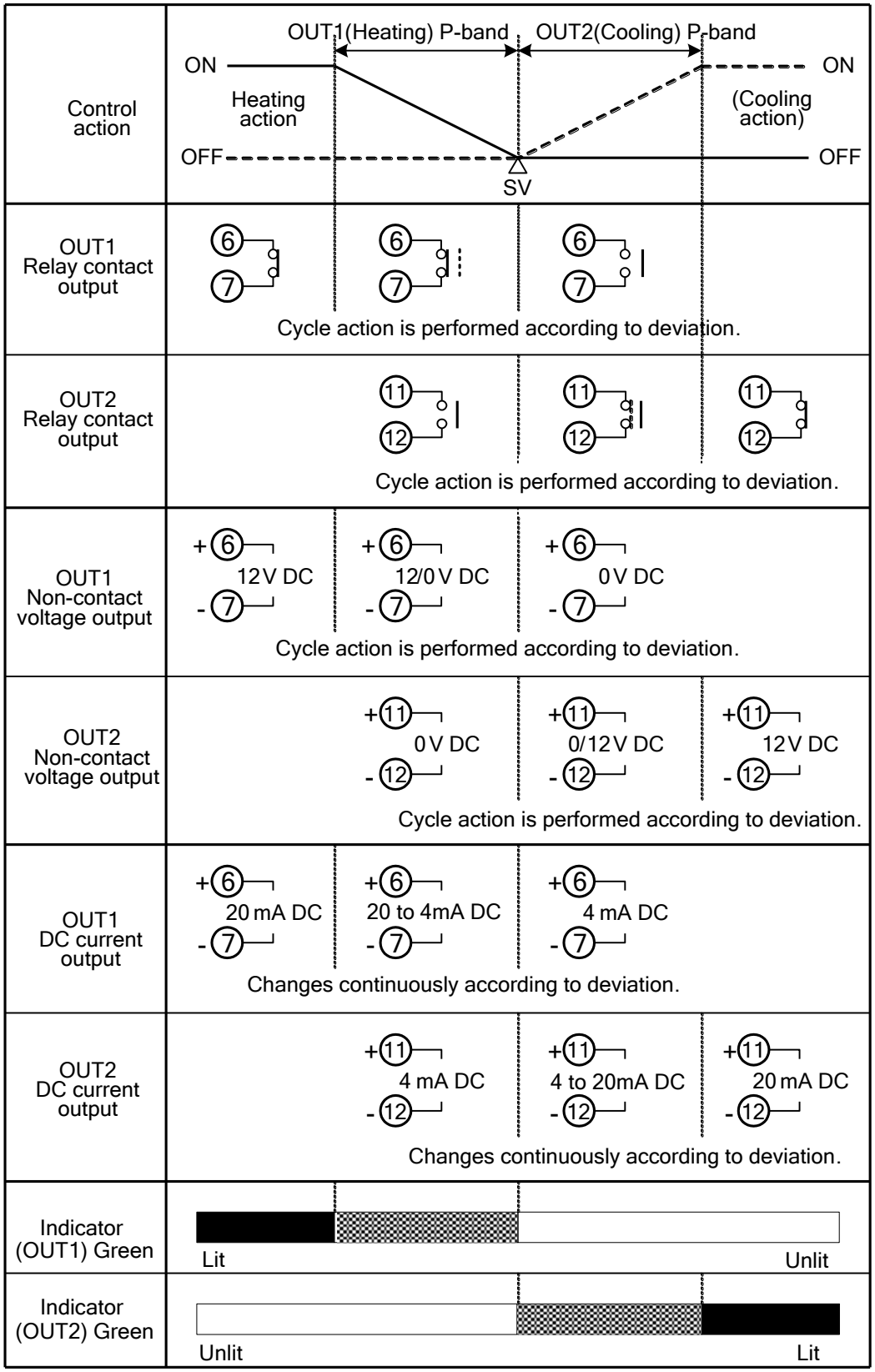

: Acts ON (lit) or OFF (unlit).

: Represents Heating control action (OUT1).

: Represents Cooling control action (OUT2).

10.5 Heating/Cooling control action (When setting Dead band)

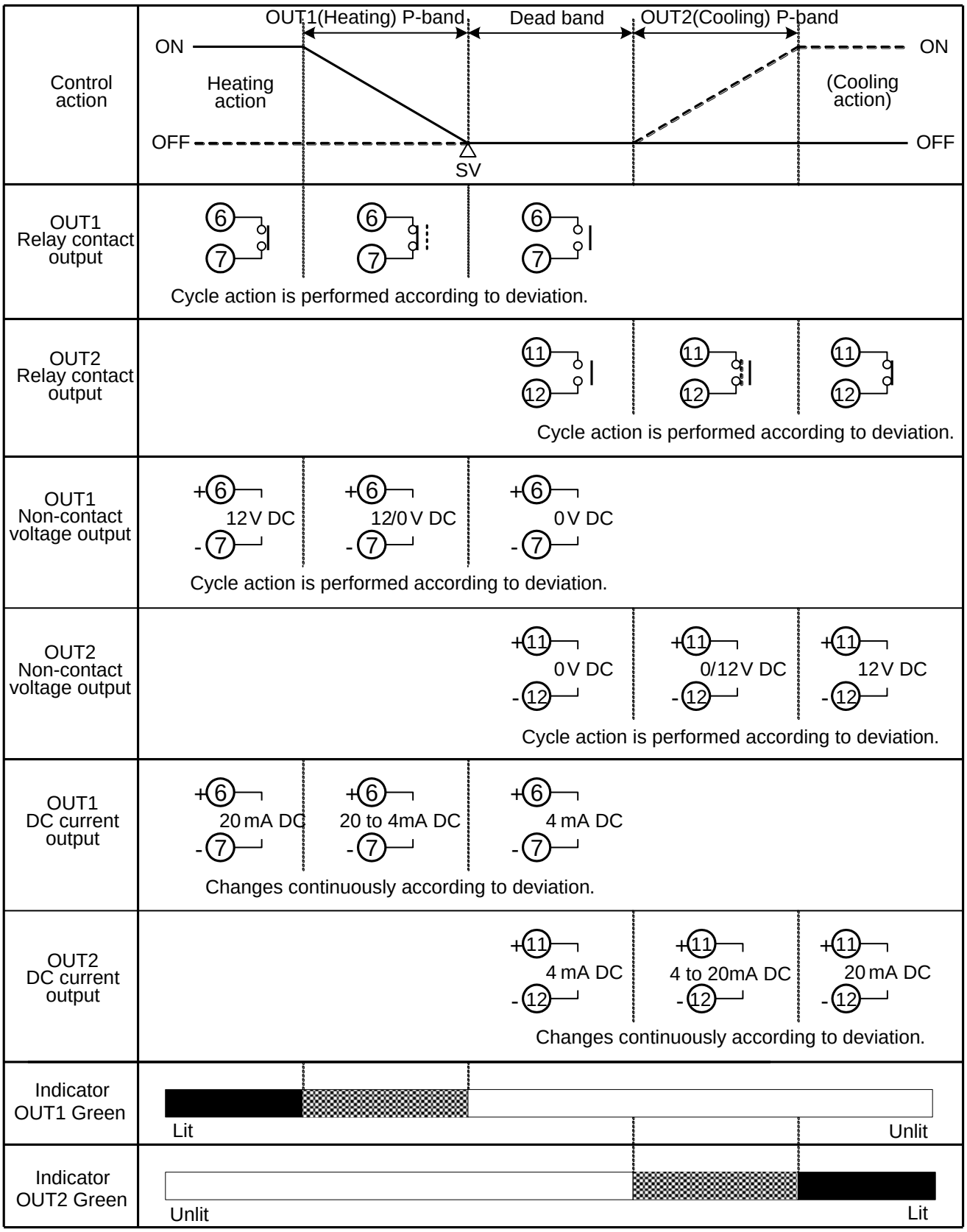

: Acts ON (lit) or OFF (unlit).

: Represents Heating control action (OUT1).

: Represents Cooling control action (OUT2).

10.6 Heating/Cooling control action (When setting Overlap band)

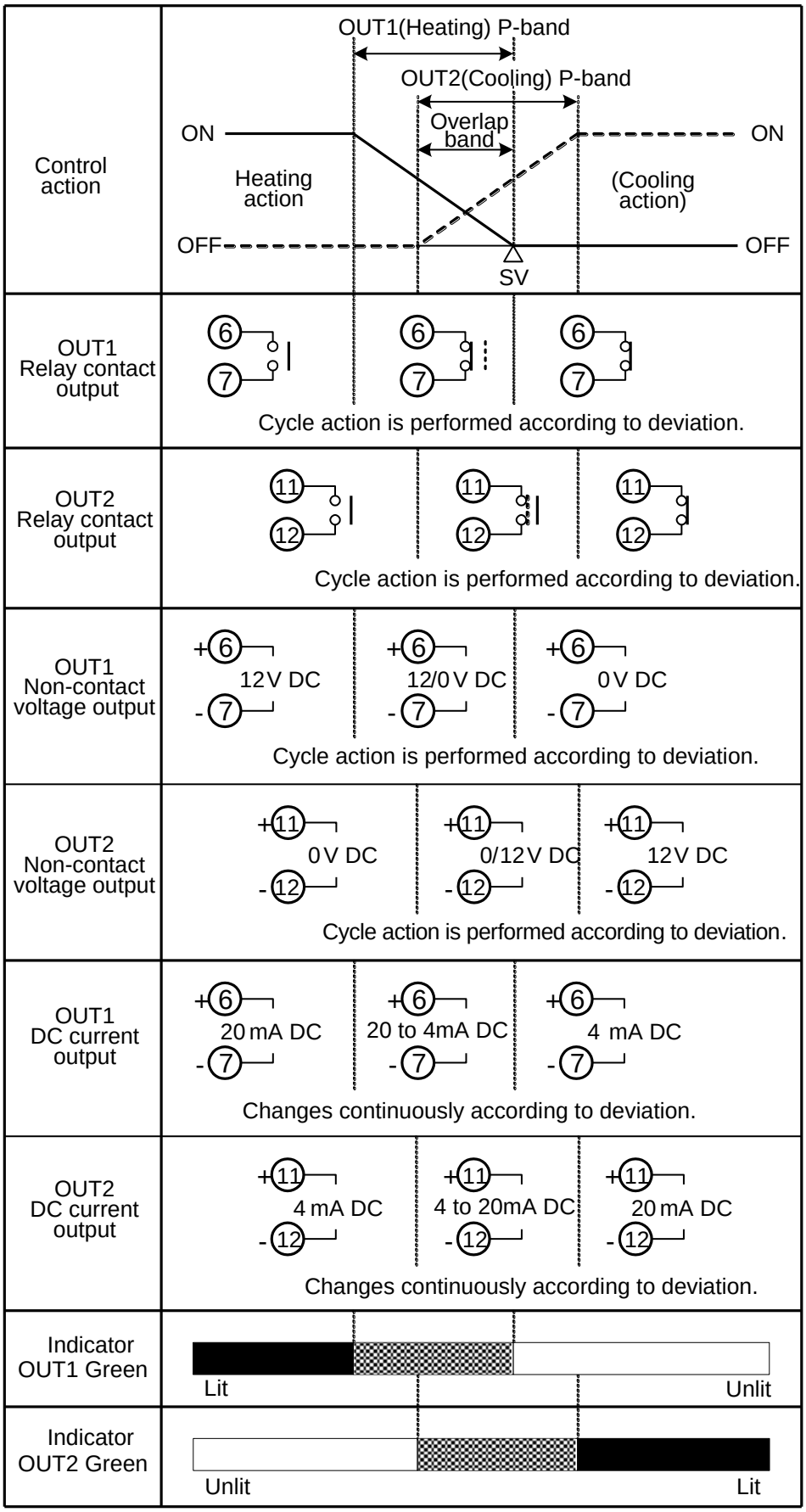

: Acts ON (lit) or OFF (unlit).

: Represents Heating control action (OUT1).

: Represents Cooling control action (OUT2).

11. AT/Auto-reset of this controller

11.1 AT

In order to set each value of P, I, D and ARW automatically, the auto-tuning process should be made to fluctuate to obtain an optimal value. One of 3 types of fluctuation below is automatically selected.

For DC input, the AT process will fluctuate around the SV for conditions of (A), (B) and (C) above.

Sometimes the auto-tuning process will not fluctuate if auto-tuning is performed at or near room temperature. Therefore auto-tuning might not finish normally.

(A) In the case of a large difference between the SV and PV (process variable) as the temperature is rising

When AT bias is set to 20℃, the AT process will fluctuate at the temperature 20℃ lower than the SV.

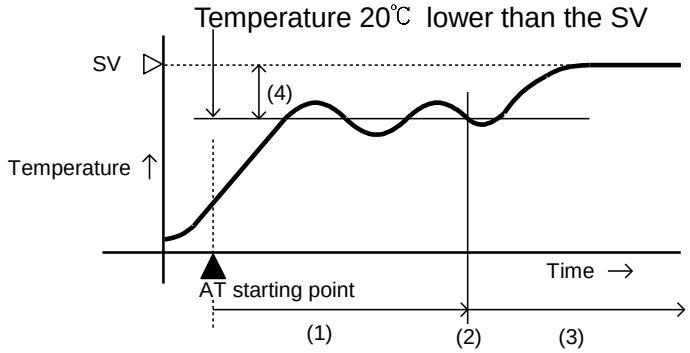

(1) Calculating PID constant
(2) PID constant calculated
(3) Controlled by the PID constant set by auto-tuning.
(4) AT bias value

(B) When the control is stable or when control temperature is within ±20℃ of the SV.

The AT process will fluctuate around the SV.

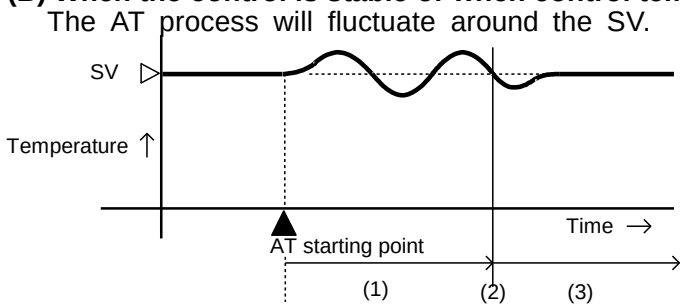

(1) Calculating PID constant
(2) PID constant calculated
(3) Controlled by the PID constant set by auto-tuning.

© In the case of a large difference between the SV and PV (process variable) as the temperature is falling

When AT bias is set to 20℃, the AT process will fluctuate at the temperature 20℃ higher than the SV.

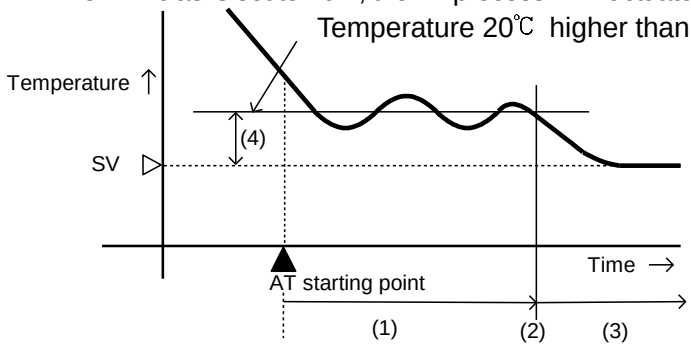

(1) Calculating PID constant
(2) PID constant calculated
(3) Controlled by the PID constant set by auto-tuning.
(4) AT bias value

11.2 Auto-reset (offset correction)

Auto-reset is performed to correct the offset at the point at which PV indication is stabilized within the proportional band during the PD action.

Since the corrected value is internally memorized, it is not necessary to perform the auto-reset again as long as the process is the same.

However, when the proportional band is set to 0, the corrected value is cleared.

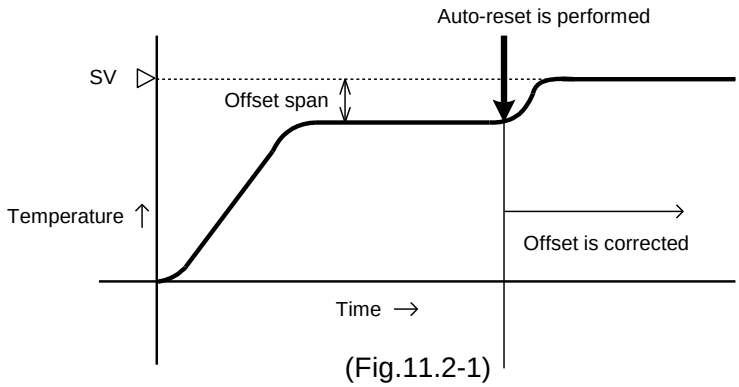

(Fig.11.2-1)

12. Specifications

12.1 Standard specifications

Rating

Input (CH1, CH2):

Multi-range input

Thermocouple : K, J, R, S, B, E, T, N, PL-Ⅱ, C(W/Re5-26) External resistance, 100Ω or less
(However, B input: External resistance, 40Ω or less)

RTD : Pt100, JPt100, 3-wire system
Allowable input lead wire resistance (10Ω or less per wire)

DC current : 0 to 20mA DC, 4 to 20mA DC
Input impedance: 50Ω [50Ω shunt resistor (sold separately) must be installed between input terminals.] Allowable input current, 50mA or less

DC voltage : 0 to 1V DC Input impedance (1MΩ or more)
Allowable input voltage (5V DC or less)
Allowable signal source resistance (2kΩ or less)

DC voltage input : 0 to 5V DC, 1 to 5V DC, 0 to 10V DC Input impedance (100kΩ or more)
Allowable input voltage (15V DC or less)
Allowable signal source resistance (100Ω or less)

Supply voltage : 100 to 240V AC 50/60Hz, 24V AC/DC 50/60Hz

Allowable voltage fluctuation: 100 to 240V AC: 85 to 264V AC, 24V AC/DC: 20 to 28V AC/DC

General structure

External dimensions : 48 x 48 x 106.5mm (W x H x D)
(Depth of control panel interior when gasket is used: 95mm)
(Depth of control panel interior when gasket is not used: 96.5mm)

Mounting : Flush

Case Material: Flame-resistant resin, Color: Light gray

Panel : Membrane sheet

Dust-proof/Drip-proof : IP66 for the front panel

Indicating structure

Display CH1 PV/SV display: Red LED 4 digits, character size 8 x 4 mm (H x W)
CH2 PV/SV display: Red LED 4 digits, character size 8 x 4 mm (H x W)

Setting structure

Setting (CH1, CH2) : Input system using membrane sheet key

Indication performance

Indication accuracy (CH1, CH2):

Thermocouple : Within ±0.2% of each input span ±1digit, or within ±2℃ (4℉), whichever is greater
However R, S input, 0 to 200℃ (400℉): Within ±6℃ (12℉)
B input, 0 to 300℃ (600℉): Accuracy is not guaranteed.
K, J, E, T, N input, less than 0℃ (32℉): Within ±0.4% of input span±1digit

RTD : Within ±0.1% of each input span ±1digit, or within ±1℃ (2℉), whichever is greater

DC current : Within ±0.2% of each input span ±1digit

DC voltage : Within ±0.2% of each input span ±1digit

Cold junction temperature compensation accuracy (CH1, CH2): within ±1℃ at 0 to 50℃

Input sampling period (CH1, CH2): 0.5 seconds

Timer performance

Time accuracy: Within ±0.5% of the setting time

Controlling performance

Setting accuracy (CH1, CH2): The same as the Indication accuracy

Control action (CH1, CH2):

PID action (with AT function)
PI action: When derivative time is set to 0
PD action (with auto reset function): When integral time is set to 0
P action (with auto reset function): When derivative and integral times are set to 0.
ON/OFF action: When proportional band is set to 0 or 0.0

Proportional band : 0 to 1000℃ (2000℉), 0.0 to 999.9℃ (℉) or 0.0 to 100.0%
(ON/OFF action when set to 0 or 0.0)

Integral time : 0 to 1000sec (OFF when set to 0)

Derivative time : 0 to 300sec (OFF when set to 0)
Proportional cycle : 1 to 120sec (Not available for DC current output type)
ARW : 0 to 100%
ON/OFF action hysteresis: 0.1 to 100.0℃ (℉), or 1 to 1000 (The placement of the decimal point follows the selection)
Output high limit setting : 0 to 100% (DC current output type: -5 to 105%)
Output low limit setting : 0 to 100% (DC current output type: -5 to 105%)

Control output (CH1, CH2)

Relay contact : 1a, Control capacity 3A 250V AC (resistive load)
1A 250V AC (inductive load cosϕ=0.4)
Electrical life, 100,000 cycles
Non-contact voltage (For SSR drive): 12V DC±15%, maximum 40mA (short circuit protected)
DC current : 4 to 20mA DC, Load resistance, maximum 550Ω

Standard function

Alarm output (CH1, CH2)

Setting accuracy: The same as the Indication accuracy
Action : ON/OFF action
Hysteresis : 0.1 to 100.0℃ (℉), or 1 to 1000
Output : Relay contact 1a
Control capacity, 3A 250V AC (resistive load)
Electrical life, 100,000 cycles

Heating/Cooling control output

If CH1 cooling output is selected during CH2 function selection, CH1 will be OUT1 (Heating output) and CH2 will be OUT2 (Cooling output).
OUT2 proportional band : 0.0 to 10.0 times OUT1 (CH1) proportional band (ON/OFF action when set to 0.0)
OUT2 integral time : The same as that of OUT1 (CH1)
OUT2 derivative time : The same as that of OUT1 (CH1)
OUT2 proportional cycle : 1 to 120 seconds
Overlap/Dead band setting range:
Thermocouple, RTD input: -100.0 to 100.0℃ (℉)
DC current, voltage input : -1000 to 1000 (The placement of the decimal point follows the selection)
OUT2 ON/OFF action hysteresis:
Thermocouple, RTD input: 0.1 to 100.0℃ (℉) (Default: 1.0℃)
DC current, voltage input : 1 to 1000 (The placement of the decimal point follows the selection)
OUT2 high limit : 0 to 100% (DC current output: -5 to 105%)
OUT2 low limit : 0 to 100% (DC current output: -5 to 105%)
OUT2 action mode selection:
One cooling action can be selected from Air cooling (linear characteristic), Oil cooling (1.5th power of the linear characteristic) and Water cooling (2nd power of the linear characteristic) by keypad operation.
Control output: The same as the CH2 control output

1-input 2-output control function

CH2 controls use CH2 parameters for CH1 input.

CH1 timer function

CH1 timer starts if CH1 input exceeds CH1 timer start temperature, and after CH1 timer set time has passed, the control (CH1 output low limit value for DC current output) and alarm action stop.
However, for the Direct control action, CH1 timer starts if CH1 input drops below the CH1 timer start temperature.
CH1 PV/SV display indicates CH1 PV, and CH2 PV/SV display flashes CH1 timer remaining time.
To start control again after CH1 timer time is up, turn the power ON again, or press the Reset key.
If CH1 timer time is set to 0 (zero), the timer does not work.
If CH1 timer set value is changed while CH1 timer is working, the setting will be effective next time.
If CH1 timer time has passed during AT, the AT will be forcibly stopped, and each parameter returns to the previous value at which AT was performed.
CH2 control output will be turned OFF (0mA DC or CH2 output low limit value for DC current output).

Delay timer function

If Delay timer function 1 is selected:

ON delay timer starts when DI input is ON (Closed), and timer remaining time will be indicated on the CH2 PV/SV display.
Timer output turns ON after ON delay timer time has passed.
After that, if DI input is turned OFF (Open), OFF delay timer starts, and timer remaining time will be indicated on the CH2 PV/SV display.
Timer output turns OFF after OFF delay timer time has passed.

If Delay timer function 2 is selected:

Control and alarm action start/stop is interlocked with the timer output.
If Delay timer is restarted, alarm action returns to its initial status (for the alarm with standby, returns to standby status again).

Between DI terminals Open : OFF
Between DI terminals Closed: ON
Circuit current when closed : 6mA

Transmission output

Converting the value (PV transmission, SV transmission or MV transmission) to analog signal every 0.5 seconds, outputs the value in current.
Transmission output (PV, SV, MV) can be selected by keypad.
Resolution : 1/8192
Current : 4 to 20mA DC (load resistance, maximum 550Ω)
Output accuracy: Within ±0.3% of Transmission output scaling span

PV difference input

Difference of temperature between CH1 PV and CH2 PV becomes CH1 input value for control, and control is performed using the CH1 parameters.
PV=(CH1 PV-CH2 PV)
Difference of temperature is indicated on the CH1 PV/SV display in the PV/SV display mode.
CH2 PV/SV display is unlit.
CH2 set values such as input type, scaling, PV filter time constant, etc. are common to those of CH1 values.
Sensor correction value is applicable to the PV difference.

Insulation/Dielectric strength

Circuit insulation configuration

If CH2 is of Multi-range input (-M), DC voltage input (-V) or PV difference input (-S) spec

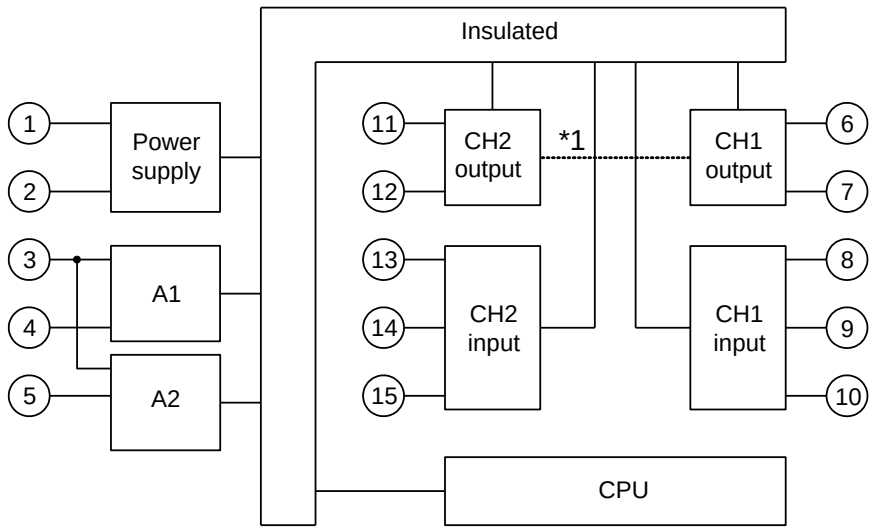

*1 When CH1 and/or CH2 output are non-contact voltage output or DC current output type, CH1 output is not insulated from CH2 output.

Insulation resistance: 10MΩ or more, at 500V DC for combinations other than the listed above

If CH2 is based on delay timer (-T) spec

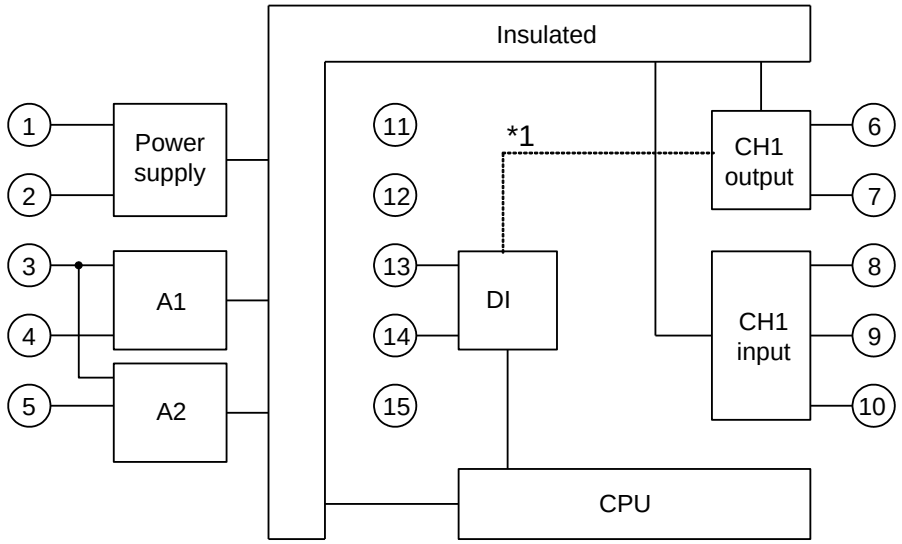

*1 When CH1 output is non-contact voltage output or DC current output type, CH1 output is not insulated from DI.

Insulation resistance: 10MΩ or more, at 500V DC

Dielectric strength

Between Input terminal and Power terminal ------- 1.5kV AC for 1 minute
Between Output terminal and Power terminal ----- 1.5kV AC for 1 minute

Attached functions:

[Sensor correction]

Refer to the “Sensor correction function” on p.21.

[Set value lock]

Refer to “8.2 Set value lock group” on p.20.

[Power failure countermeasure]

The setting data is backed up in the non-volatile IC memory.

[Self-diagnosis]

The CPU is monitored by a watchdog timer, and if an abnormal status is found on the CPU, the controller is switched to warm-up status.

[Automatic cold junction temperature compensation] (Only thermocouple input type)

This detects the temperature at the connecting terminal between the thermocouple and the instrument, and always maintains at the same status as when the reference junction is located at 0℃ (32℉).

[Burnout (overscale)]

When the thermocouple or RTD input is burnt out, control output is turned OFF (for DC current output type, output low limit value), and the PV/SV display flashes “ - - - - ”.

[Indication range, Control range]

Thermocouple, RTD input

Input	Input range	Indication range	Control range
K, T	–199.9 to 400.0℃	–199.9 to 450.0℃	–206.0 to 450.0℃
	–199.9 to 750.0℉	–199.9 to 850.0℉	–209.0 to 850.0℉
Pt100	–199.9 to 850.0℃	–199.9 to 900.0℃	–210.0 to 900.0℃
	–200 to 850℃	–210 to 900℃	–210 to 900℃
	–199.9 to 999.9℉	–199.9 to 999.9℉	–210.0 to 1099.9℉
	–300 to 1500℉	–318 to 1600℉	–318 to 1600℉
JPt100	–199.9 to 500.0℃	–199.9 to 550.0℃	–206.0 to 550.0℃
	–200 to 500℃	–207 to 550℃	–207 to 550℃
	–199.9 to 900.0℉	–199.9 to 999.9℉	–210.0 to 999.9℉
	–300 to 900℉	–312 to 1000℉	–312 to 1000℉

Indication range and Control range for thermocouple inputs other than the above:
[Input range low limit value –50℃ (100℉)] to [Input range high limit value +50℃ (100℉)]

DC input (Indication range, Control range)
[Scaling low limit value–Scaling span x 1%] to [Scaling high limit value +Scaling span x 10%]
However, if input drops below –1999, "- - - -" flashes, and if input exceeds 9999 "‾ ‾ ‾ ‾" flashes.

DC input disconnection:
When DC input is disconnected, the PV/SV display flashes "- - - -" for 4 to 20mA DC and 1 to 5V DC input, and "‾ ‾ ‾ ‾" for 0 to 1V DC input. For 0 to 20mA DC, 0 to 5V DC and 0 to 10V DC input, the PV/SV display indicates the value corresponding with 0mA or 0V input.

[Warm-up indication]
After the power supply to the instrument is turned on, the sensor input characters are indicated on the PV/SV display for 6 seconds.

Power consumption : Approx. 8VA
Ambient temperature : 0 to 50℃ (32 to 122℉)
Ambient humidity : 35 to 85%RH (no condensation)
Weight : Approx. 180g
Accessories included : Screw type mounting brackets 1 set
Instruction manual 1 copy
Terminal cover 1 piece (when TC option is added)
Accessories sold separately: 50Ω Shunt resistor

12.2 Optional specifications

Color Black (Option code: BK): Front panel frame and case: Black
Terminal cover (Option code: TC): Electrical shock protection terminal cover

13. Troubleshooting

If any malfunctions occur, refer to the following items after checking the power supply to the controller.

13.1 Indication

Problem	Presumed cause and solution
[‾ ‾ ‾ ‾] is flashing on the PV/SV display.	• Thermocouple, RTD or DC voltage (0 to 1V DC) is burnt out. Change each sensor. **How to check whether the sensor is burnt out** [Thermocouple] If the input terminals of the instrument are shorted, and if a value around room temperature is indicated, the instrument is likely to be operating normally, however, the sensor may be burnt out. [RTD] If approx. 100Ω of resistance is connected to the input terminals between A-B of the instrument and between B-B is shorted, and if approximate 0℃ (32℉) is indicated, the instrument is likely to be operating normally, however, the sensor may be burnt out. [DC voltage (0 to 1V DC)] If the input terminals of the instrument are shorted, and if a scaling low limit value is indicated, the instrument is likely to be operating normally, however, the signal wire may be disconnected. • Check whether the input terminals of thermocouple, RTD or DC voltage (0 to 1V DC) are securely mounted to the instrument input terminals. Connect the sensor terminals to the instrument input terminals securely.
[- - - -] is flashing on the PV/SV display.	• Check whether input signal source for DC voltage (1 to 5V DC) or DC current (4 to 20mA DC) is disconnected. **How to check whether the input signal wire is disconnected** [DC voltage (1 to 5V DC)] If the input to the input terminals of the instrument is 1V DC and if a scaling low limit value is indicated, the instrument is likely to be operating normally, however, the signal wire may be disconnected. [DC current (4 to 20mA DC)] If the input to the input terminals of the instrument is 4mA DC and if a scaling low limit value is indicated, the instrument is likely to be operating normally, however, the signal wire may be disconnected. • Check whether input signal wire for DC voltage (1 to 5V DC) or DC current (4 to 20mA DC) is securely connected to the instrument input terminals. • Check if polarity of thermocouple or compensating lead wire is correct. • Check whether codes (A, B, B) of RTD agree with the instrument terminals.

The PV/SV display keeps indicating the value which was set during Scaling low limit setting.	• Check whether the input signal source for DC voltage (0 to 5V DC, 0 to 10V DC) and DC current (0 to 20mA DC) is disconnected. **How to check whether the input signal wire is disconnected** [DC voltage (0 to 5V DC, 0 to 10V DC)] If the input to the input terminals of the instrument is 0V DC and if a scaling low limit value is indicated, the instrument is likely to be operating normally, however, the signal wire may be disconnected. [DC current (0 to 20mA DC)] If the input to the input terminals of the instrument is 0mA DC and if a scaling low limit value is indicated, the instrument is likely to be operating normally, however, the signal wire may be disconnected. • Check whether the input lead wire terminals for DC voltage (0 to 5V DC, 0 to 10V DC) or DC current (0 to 20mA DC) are securely mounted to the instrument input terminals.
The indication of PV/SV display is abnormal or unstable.	• Check whether sensor input or temperature unit (℃ or ℉) is correct. Select the sensor input and temperature unit (℃ or ℉) properly. • Sensor correcting value is unsuitable. Set it to a suitable value. • Check whether the specification of the sensor is correct. • AC leaks into the sensor circuit. Use an ungrounded type sensor. • There may be equipment that interferes with or makes noise near the controller. Keep equipment that interferes with or makes noise away from the controller.
The PV does not change.	• SV may be selected during CH indication selection. Select indications other than SV.
The PV/SV display is indicating [Err 1].	• Internal memory is defective. Contact our agency or us.

13.2 Key operation

Problem	Presumed cause and solution
• Unable to set the SV, P, I, D, proportional cycle or alarm value • The values do not change by △, ▽ keys.	• Set value lock (Lock 1 or Lock 2) is selected. Release the lock selection. • During AT or auto-reset. In the case of AT, cancel AT. It takes approximately 4 minutes until auto-reset is finished.
The setting indication does not change in the input range even if the △, ▽ keys are pressed, and new values are unable to be set.	• Scaling high or low limit value in the CH1, CH2 function group may be set at the point where the value does not change. Set it to a suitable value.
CH2 SV cannot be set.	• CH2 may be based on delay timer (-T) or PV difference input (-S) specification. CH1 cooling output, CH1 transmission output or CH1 timer function may be selected during CH2 function selection. Select “CH2 controller” or “CH1 output 2” during CH2 function selection. If CH2 is based on delay timer (-T) or PV difference input (-S) spec, CH2 SV setting item will not be indicated.
CH2 parameter group and CH2 function group are not indicated.	• CH2 may be based on delay timer (-T) or PV difference input (-S) spec. CH1 cooling output, CH1 transmission output or CH1 timer function may be selected during CH2 function selection. Select “CH2 controller” or “CH1 output 2” during CH2 function selection. If CH2 is based on delay timer (-T) or PV difference input (-S) spec, CH2 SV group will not be indicated.

13.3 Control

Problem	Presumed cause and solution
Temperature does not rise.	• Sensor is out of order. Replace the sensor. • Check whether the Sensor or control output terminals are securely mounted to the instrument input terminals. Ensure that the sensor or control output terminals are mounted to the instrument input terminals securely. • Check whether the wiring of sensor or control output terminals is correct.
The control output remains in an ON status.	• Output low limit value is set to 100% or higher in the CH1, CH2 function group. Set it to a suitable value.
The control output remains in an OFF status.	• Output high limit value is set to 0% or less in the CH1, CH2 function group. Set it to a suitable value.
CH1 timer does not work.	• CH1 timer time may be set to 0 (zero) seconds. Set it to a suitable value. • CH1 timer start temperature should be set suitably. Timer starts when CH1 input exceeds CH1 timer start temperature. For the Direct control action, timer starts if CH1 input drops below CH1 timer start temperature. Set it to a suitable value.
Delay timer does not work.	• Delay action time unit, ON delay timer or OFF delay timer should be set suitably. Set them to suitable values.

• If you have any inquiries, please consult our agency or the shop where you purchased the unit.

***** Inquiry *****

For any inquiries about this unit, please contact our agency or the shop where you purchased the unit after checking the following.

[Example]

• Model ---------- WCS-13A-RR/MM
• Serial number ---------- No. xxxxxxxxx

In addition to the above, please let us know the details of the malfunction, if any, and the operating conditions.

SHINKO TECHNOS CO., LTD.
OVERSEAS DIVISION

Reg. Office: 2-5-1, Senbahigashi, Minoo, Osaka, Japan
URL : http://www.shinko-technos.co.jp
E-mail : overseas@shinko-technos.co.jp
Tel : 81-72-727-6100
Fax: 81-72-727-7006